CARTER

POWER CENTER

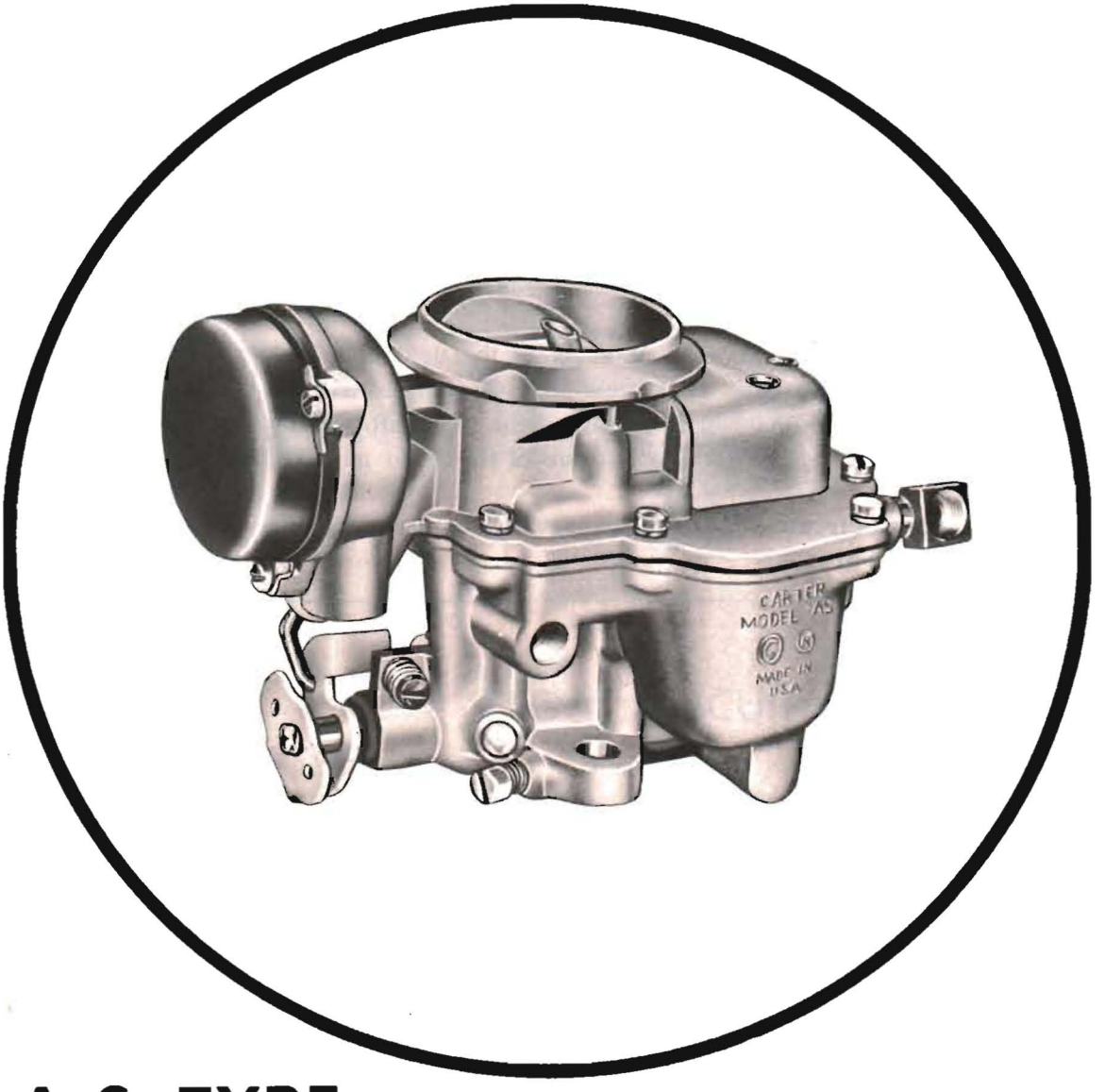

A S-TYPE

CARBURETER

CARTER CARBURETOR
DIVISION OF acf INDUSTRIES
INCORPORATED
ST. LOUIS, MO., U. S. A.

Form 3676

EXPLANATION OF CIRCUITS CARTER MODEL AS CLIMATIC® CONTROL CARBURETER

The Model AS carbureter combines many of the desirable features of previous single Carter downdraft units, plus several new features all in one easy-to-service assembly. Reduced over-all height, accessible adjustments and a combined body and flange casting are a few of its better points.

Five conventional circuits, as used in previous carbureters, are to be found in this unit. They are:

Float Circuit

Low-Speed Circuit

High-Speed Circuit

Pump Circuit

Climatic ® Control (Choke) Circuit

Light, durable aluminum is used for all castings. The metering rod, step-up jet rod, step-up piston and step-up piston spring may be replaced without complete disassembly of the carbureter.

The Carter Climatic ® Control automatic choke provides quick cold engine starting and smooth warm-up performance under all climatic conditions.

PRINTED IN U.S.A.

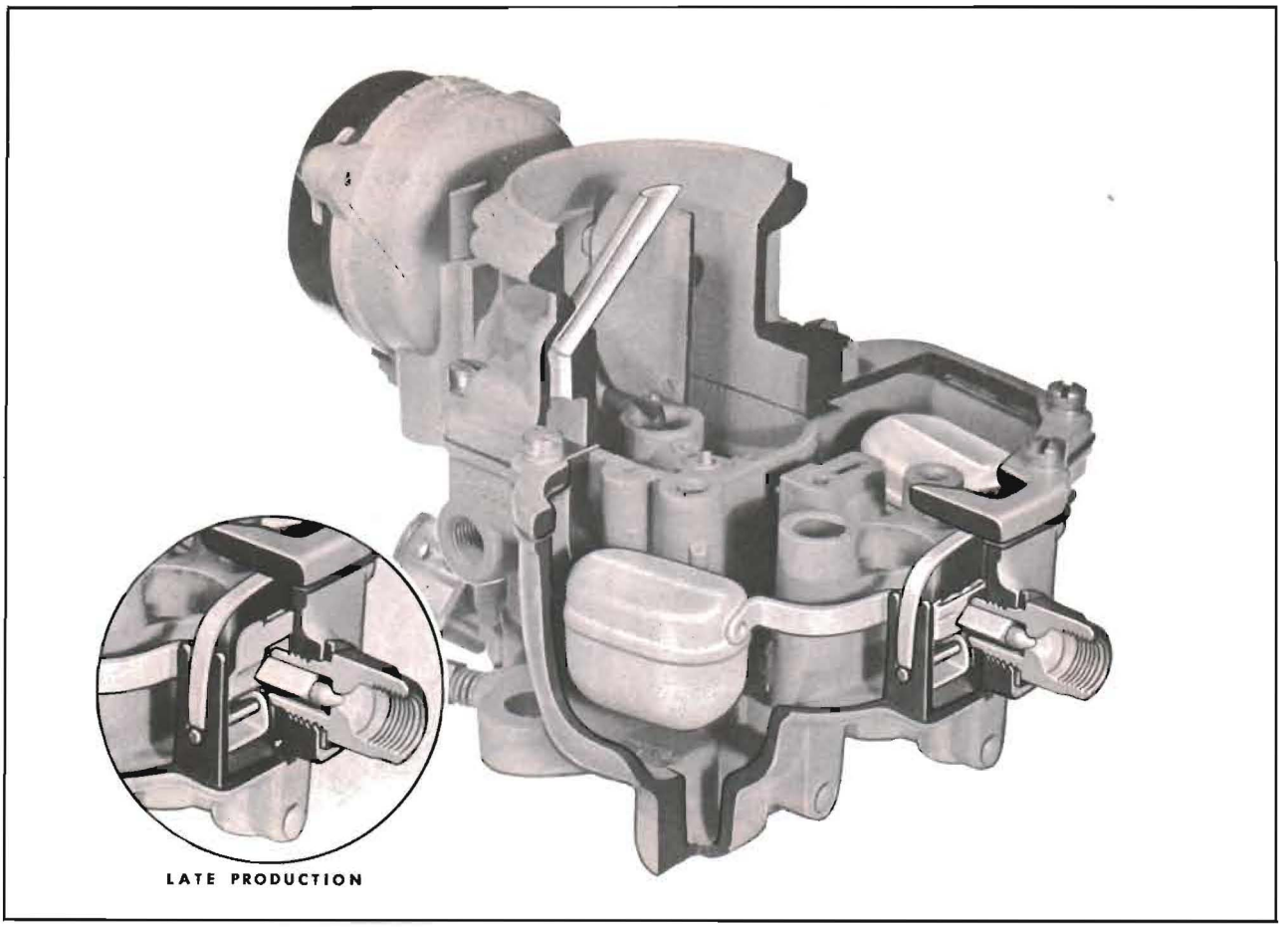

FLOAT CIRCUIT

The purpose of the float circuit is to maintain an adequate supply of fuel at the proper level in the bowl for use by the low-speed, high-speed, pump and choke circuits. The twin floats, which follow the contours of the fuel bowl, are designed to provide a stable fuel supply under all operating conditions.

Some model AS carbureters were produced with the lips on the float levers clipped together. Late models use overlapping tangs on the float lips (without the clip).

Setting the float to specifications assures an adequate supply of fuel in the bowl for all operating conditions. Float adjustment must be made with the bowl cover gasket, and float pin retainer removed. Hold the lip on the float arm against the seated intake needle, making sure the hinge pin is at the bottom of its guide slots. The float setting is measured from the top surface of the bowl to the top of each float shell. Adjust by bending lip on float arm. The floats must not rub anywhere against the inner walls of the bowl. If necessary, bend float arm slightly to provide clearance on all sides of float shells.

Inspect the intake needle and seat, and float assembly for wear. The carbureter bowl should be clean and free of dirt, gum or other foreign mater.

The bowl vent is calibrated to provide proper air pressure above the fuel at all times. To assure a positive seal, always use a new bowl cover gasket when reassembling. An air leak at this point can result in a mileage complaint.

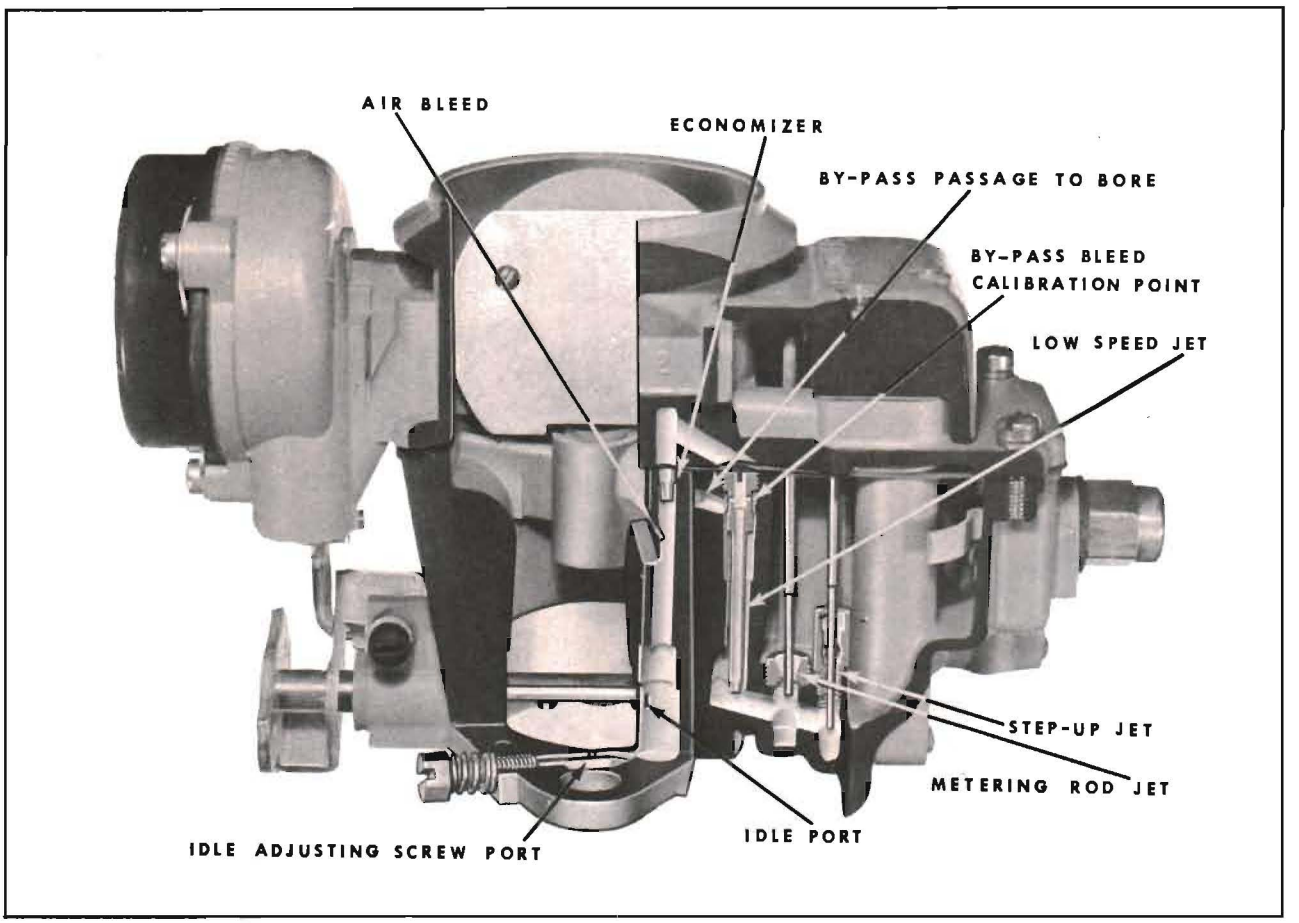

LOW-SPEED CIRCUIT

Fuel for idle and early part throttle operation is metered through the low-speed circuit.

Gasoline enters the idle well through the metering rod jet and step-up jet. The low-speed jet measures the amount of fuel for idle and early part throttle operation. The air by-pass, economizer and idle air bleed are carefully calibrated and serve to break up the liquid fuel and mix it with air as it moves through the passage to the idle port and idle adjustment screw port. Turning the idle adjustment screw towards its seat reduces the quantity of fuel mixture supplied by the idle circuit.

The idle port is slot shaped. As the throttle valve is opened, more of the idle port is uncovered allowing a greater quantity of gasoline and air mixture to enter the carbureter bore.

The by-pass, economizer, idle port, idle adjustment screw port, as well as the bore of the carbureter flange must be clean and free of carbon. Obstructions will cause poor low-speed engine operation. A worn or damaged idle adjustment screw or low-speed jet, should be replaced. The flush plug sealing the idle passage at the flange surface should not be removed in service.

Use care in handling the carbureter during servicing to avoid damaging the throttle valve as the valve projects below the flange in the open position.

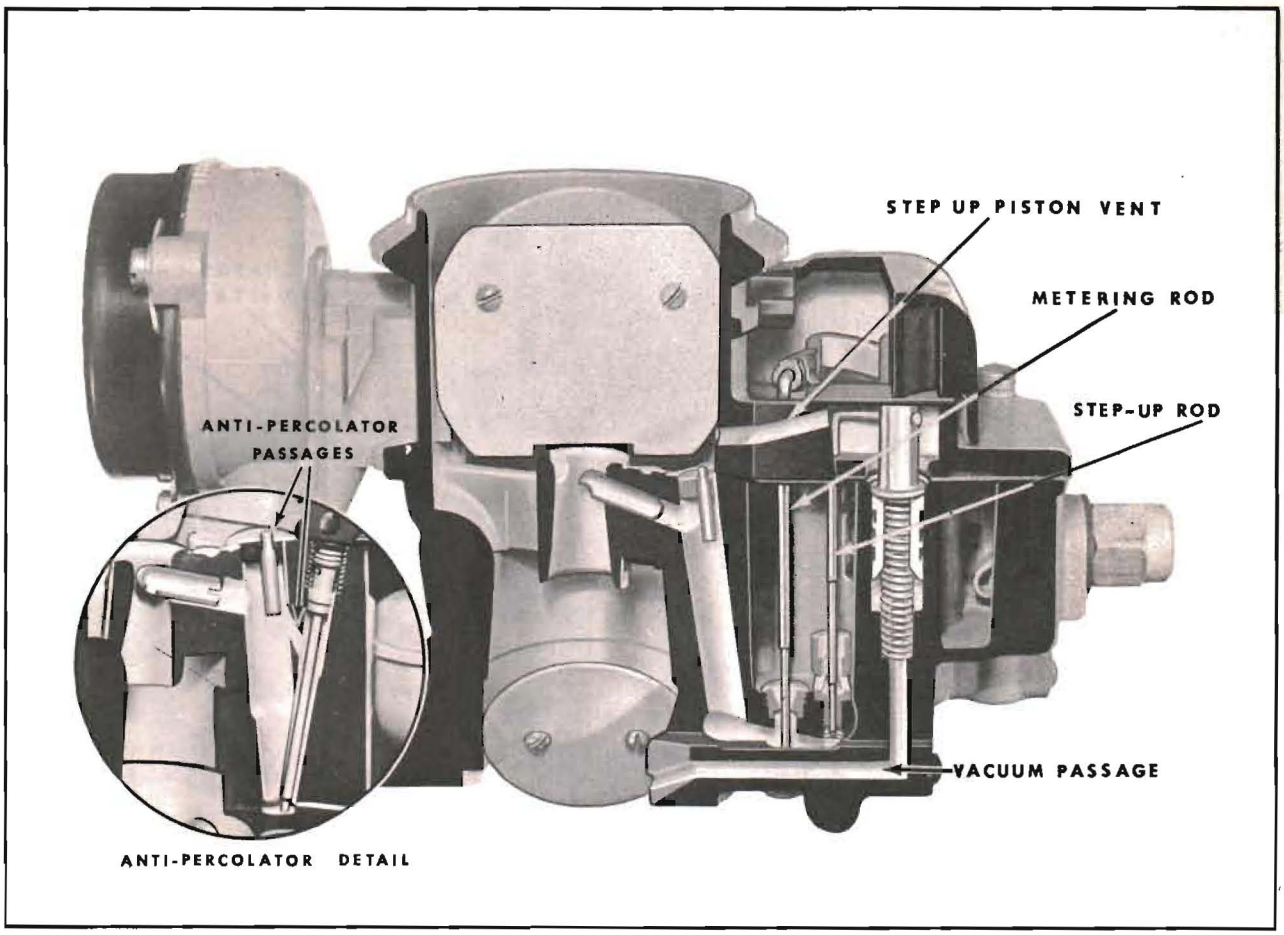

HIGH-SPEED CIRCUIT

Fuel for part throttle and full throttle operation is supplied through the high-speed circuit.

The position of the metering rod in the metering rod jet and the step-up rod in the step-up rod jet, controls the amount of fuel admitted to the high-speed nozzle.

METERING ROD OPERATION

The metering rod on some models is larger in diameter at its lower end. As the throttle is opened the metering rod moves downward and more fuel is permitted to flow through the metering rod jet.

STEP-UP ROD OPERATION

The position of the step-up rod is controlled by manifold vacuum applied to the vacuum piston.

During part throttle operation, manifold vacuum pulls the step-up piston and rod assembly down, holding the step-up rod in the jet. This is true at all times that the vacuum under the piston is strong enough to overcome the tension of the step-up piston spring. Fuel is then metered around the larger diameter of the step-up rod in the jet.

Under any operating condition, when the tension of the spring overcomes the pull of vacuum under the piston, the step-up rod will move out of the jet into power position. This allows additional fuel to be metered through the jet. The step-up rod does not require adjustment.

ANTI-PERCOLATOR

To prevent vapor bubbles in the nozzle passage and low-speed well caused by heat from forcing fuel out of the nozzle, anti-percolator passages, and calibrated plugs or bushings are used. Their purpose is to vent the vapors and relieve the pressure before it is sufficient to push the fuel out of the nozzle and into the intake manifold. Anti-percolator plugs, bushings, and the main nozzle are permanently installed and must not be removed in service.

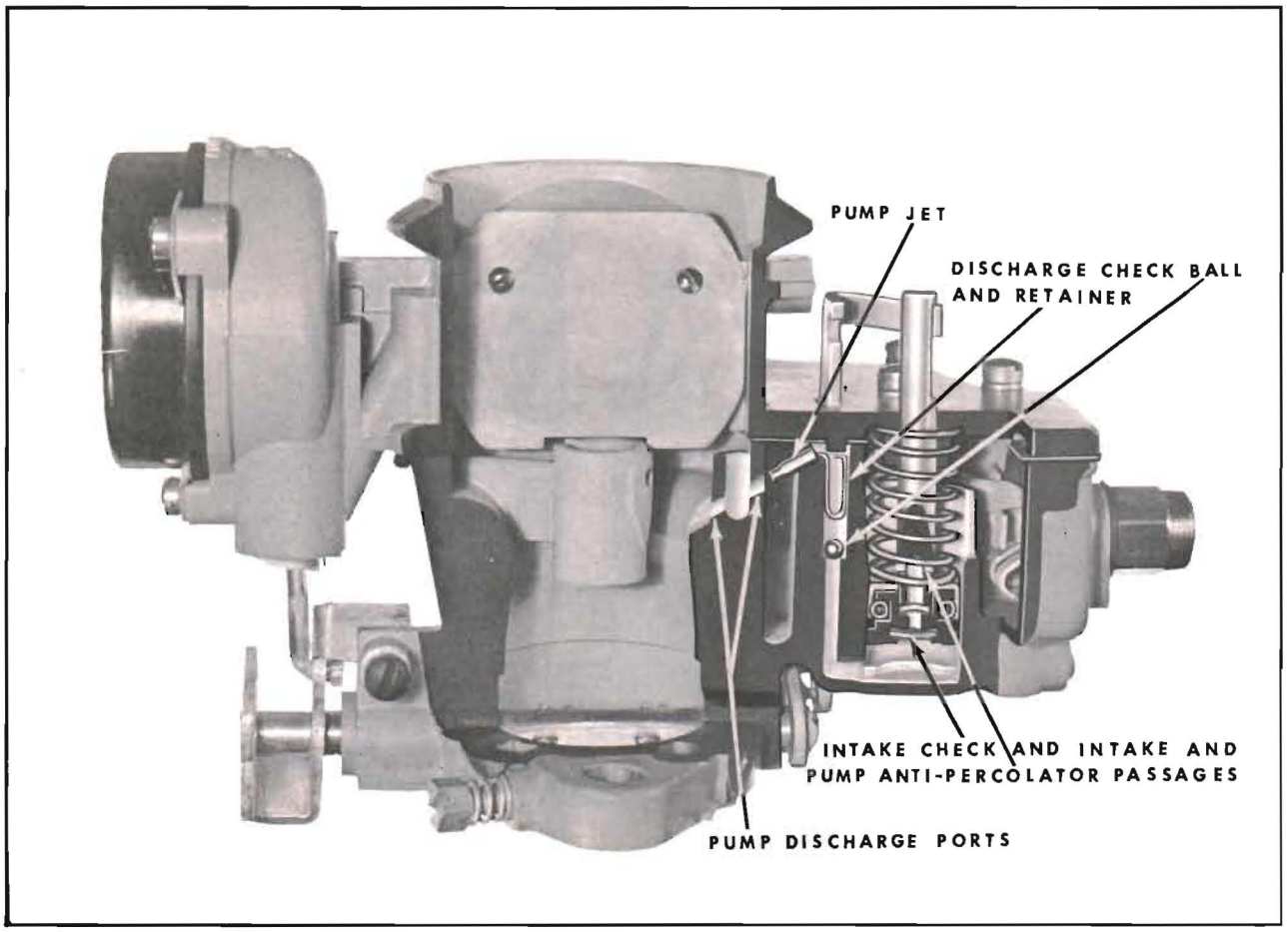

PUMP CIRCUIT

The accelerating pump circuit provides a measured amount of fuel, which is necessary to assure smooth engine operation for acceleration.

When the throttle is closed, the pump plunger moves upward in its cylinder and fuel is drawn into the cylinder through the intake check. The discharge check is seated at this time to prevent air being drawn into the cylinder. When the throttle is opened, the pump plunger moves downward forcing fuel out through the discharge passage, past the discharge check and out of the pump jet. When the plunger moves downward, the intake check is closed preventing fuel from being forced back into the bowl.

When the throttle is opened, the pump spring moves the piston to force fuel through the pump discharge jet. The calibration of the pump spring and the size of the jet provide a pump discharge of the desired duration.

During high-speed operation a vacuum exists at the pump discharge port. To prevent fuel from being drawn through the pump circuit, the pump jet is vented by its location in the fuel bowl above fuel level. This prevents fuel from being drawn through the pump jet.

PUMP ANTI-PERCOLATOR

When the pump plunger is stationary the intake check is not seated. This permits fuel vapor pressure caused by heat to be relieved through the intake passages located in the plunger shaft.

The pump jet is pressed into the casting during manufacture and the intake check retainer is pressed into the plunger. These parts must not be removed in service. Be sure the pump plunger leather is in good condition and the intake and discharge checks and pump jet are free of lint, gum or other foreign matter.

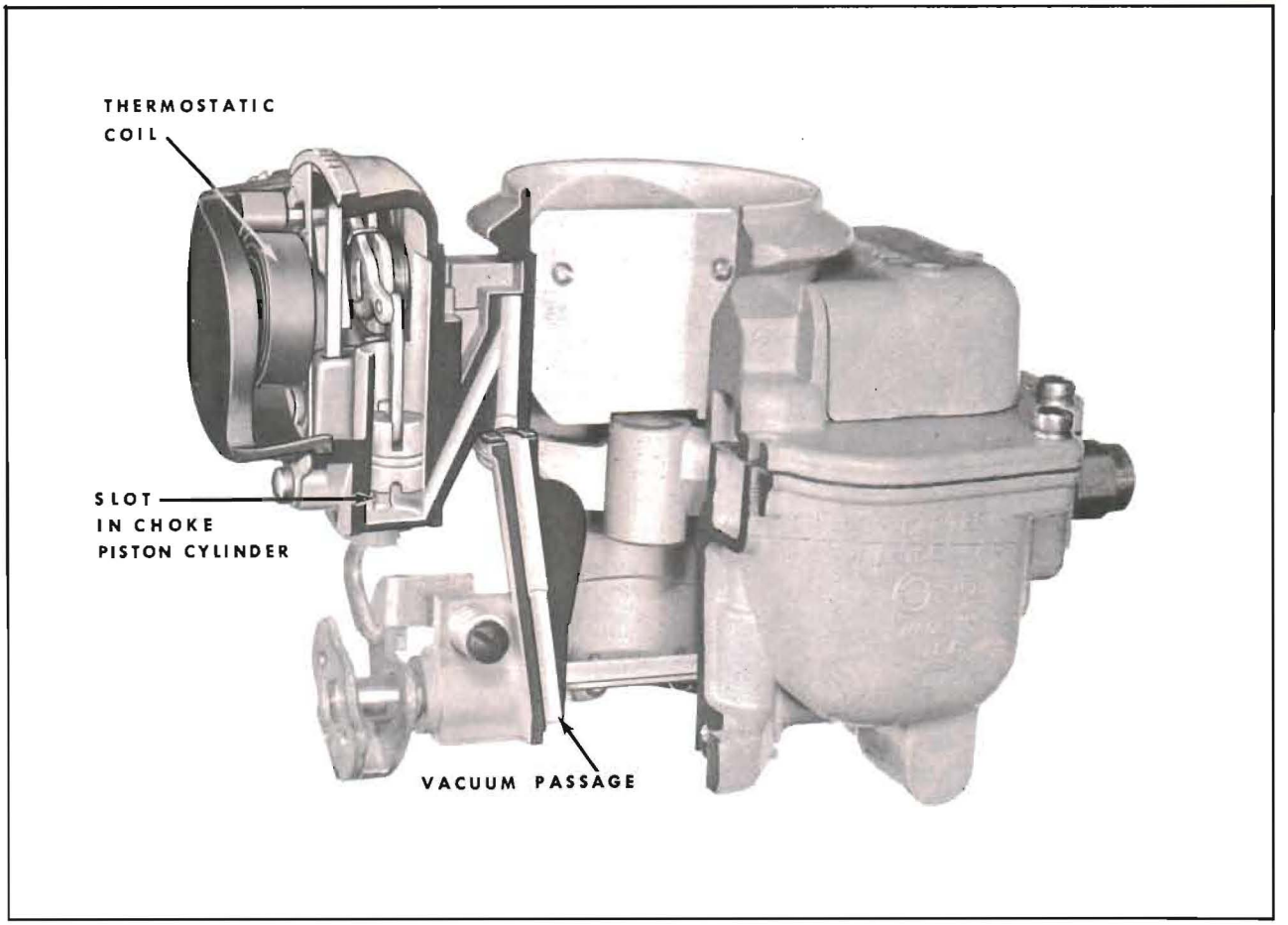

CLIMATIC® CONTROL CHOKE CIRCUIT

The Climatic ® Control circuit provides a correct mixture necessary for quick cold engine starting and warm up.

When the engine is cold, tension of the thermostatic coil holds the choke valve closed. When the engine is started, air velocity against the offset choke valve causes the valve to open slightly against the thermostatic coil tension. Intake manifold vacuum applied to the choke piston also tends to pull the choke valve open. The choke valve assumes a position where tension of the thermostatic coil is balanced by the pull of vacuum on the piston and force of air velocity on the offset valve.

When the engine starts, slots located in the sides of the choke piston cylinder are uncovered allowing intake manifold vacuum to draw warm air heated by the exhaust manifold, through the Climatic ® Control housing. The flow of warm air in turn heats the thermostatic coil and causes it to lose some of its tension. The thermostatic coil loses its tension gradually until the choke valve reaches full-open position.

If the engine is accelerated during the warm-up period, the corresponding drop in manifold vacuum allows the thermostatic coil to momentarily close the choke, providing a richer mixture.

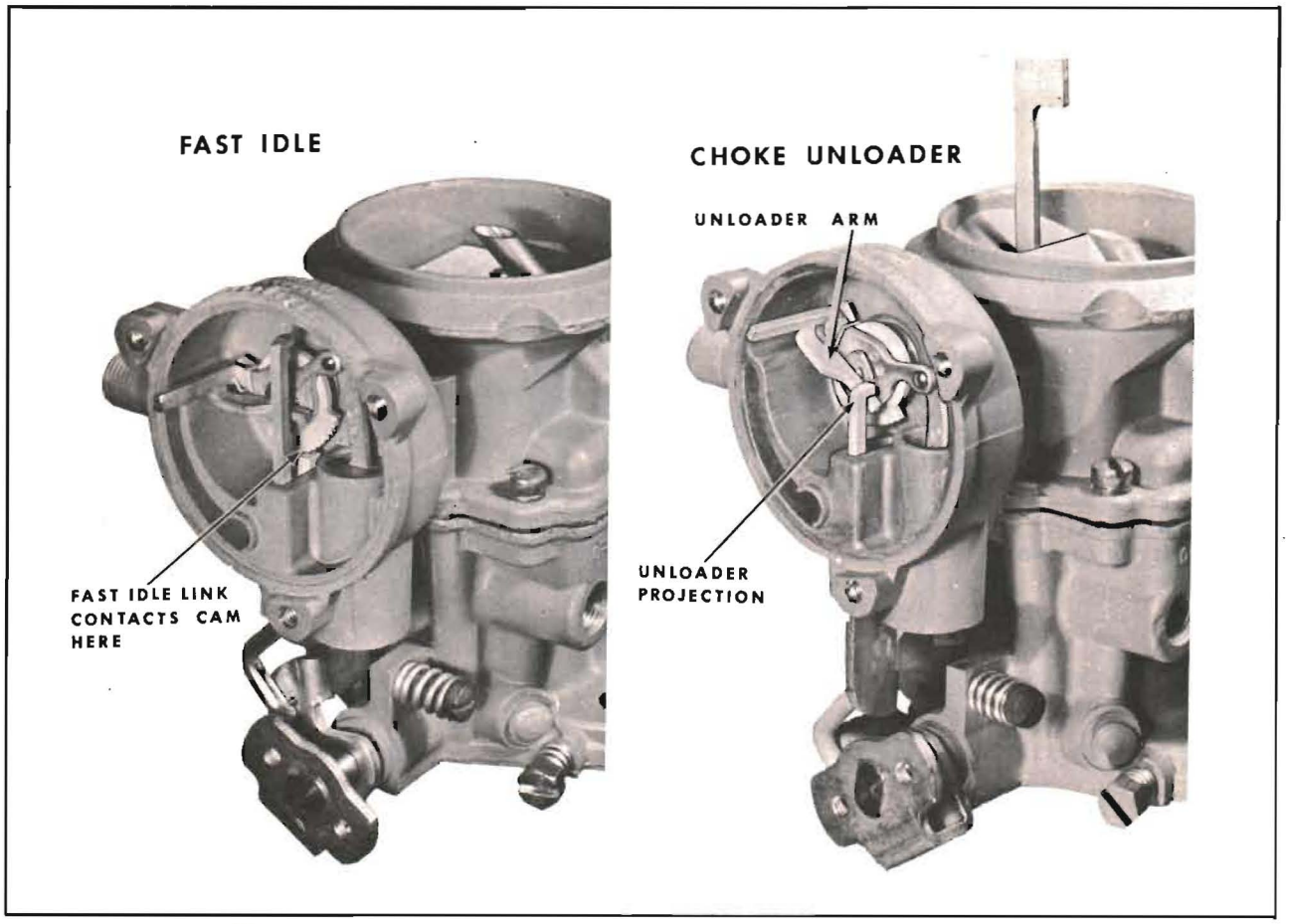

CLIMATIC® CONTROL CHOKE CIRCUIT (Continued)

FAST IDLE

During the warm-up period it is necessary to provide a fast idle speed to prevent engine stalling. This is accomplished by a fast idle cam connected to the choke shaft. The fast idle link attached to the throttle lever contacts the fast idle cam and prevents the throttle valve from returning to a normal warm engine idle position while the Climatic ® Control is in operation.

UNLOADER

If during the starting period the engine becomes flooded, the choke valve may be opened manually to clean out any excessive fuel in the intake manifold. This may be accomplished by depressing the accelerator pedal to the floor mat and engaging the starter. The unloader projection on the fast idle link will contact the unloader arm on the choke shaft and in turn partially open the choke valve.