CARBURETOR
CIRCUIT MANUAL

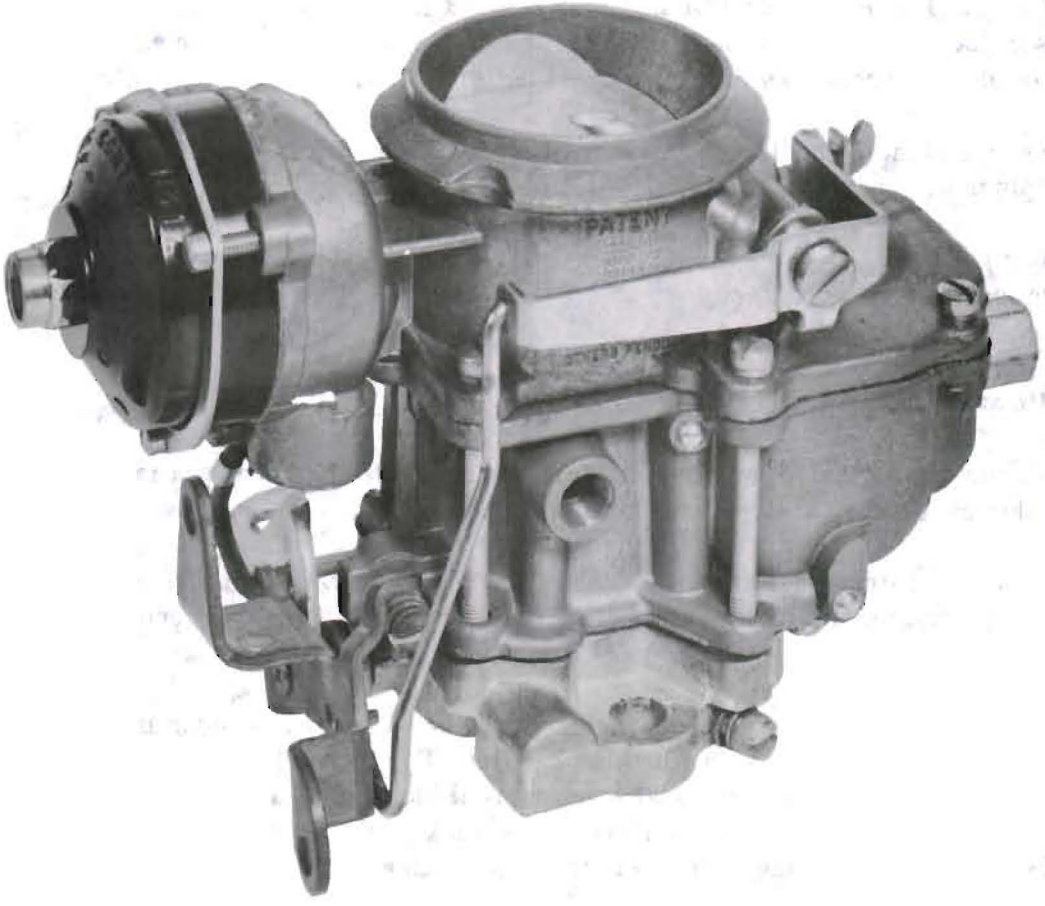

BBS-MODEL

PRICE
25¢

acf CARTER®

EXPLANATION OF CIRCUITS CARTER BBS CLIMATIC® CONTROL CARBURETER

The Model BBS carbureter combines many of the desirable features of previous single B & B downdraft units, plus several new features all in one easy-to service assembly. Reduced over-all height, accessible adjustments and removable subassemblies are a few of its better points.

Five conventional circuits, as used in previous carbureters, are to be found in this unit. They are:

Float Circuit
Low-Speed Circuit
High-Speed Circuit
Pump Circuit
Climatic® Control (Choke) Circuit

Light, durable aluminum will be used for castings. All major calibration points in this carbureter are replaceable in service.

The Carter Climatic® Control automatic choke provides quick cold engine starting and smooth warm-up performance under all climatic conditions.

Carbureters used with torque converter or automatic transmissions incorporate an external slow-closing throttle dashpot. For overdrive equipped vehicles, the carbureter is provided with an external kick-down switch. Both the slow-closing throttle dashpot and overdrive kick-down switch may be serviced without removing the carbureter from the engine.

acf
Carter Carburetor Division

Form -3620
Printed in U.S.A.

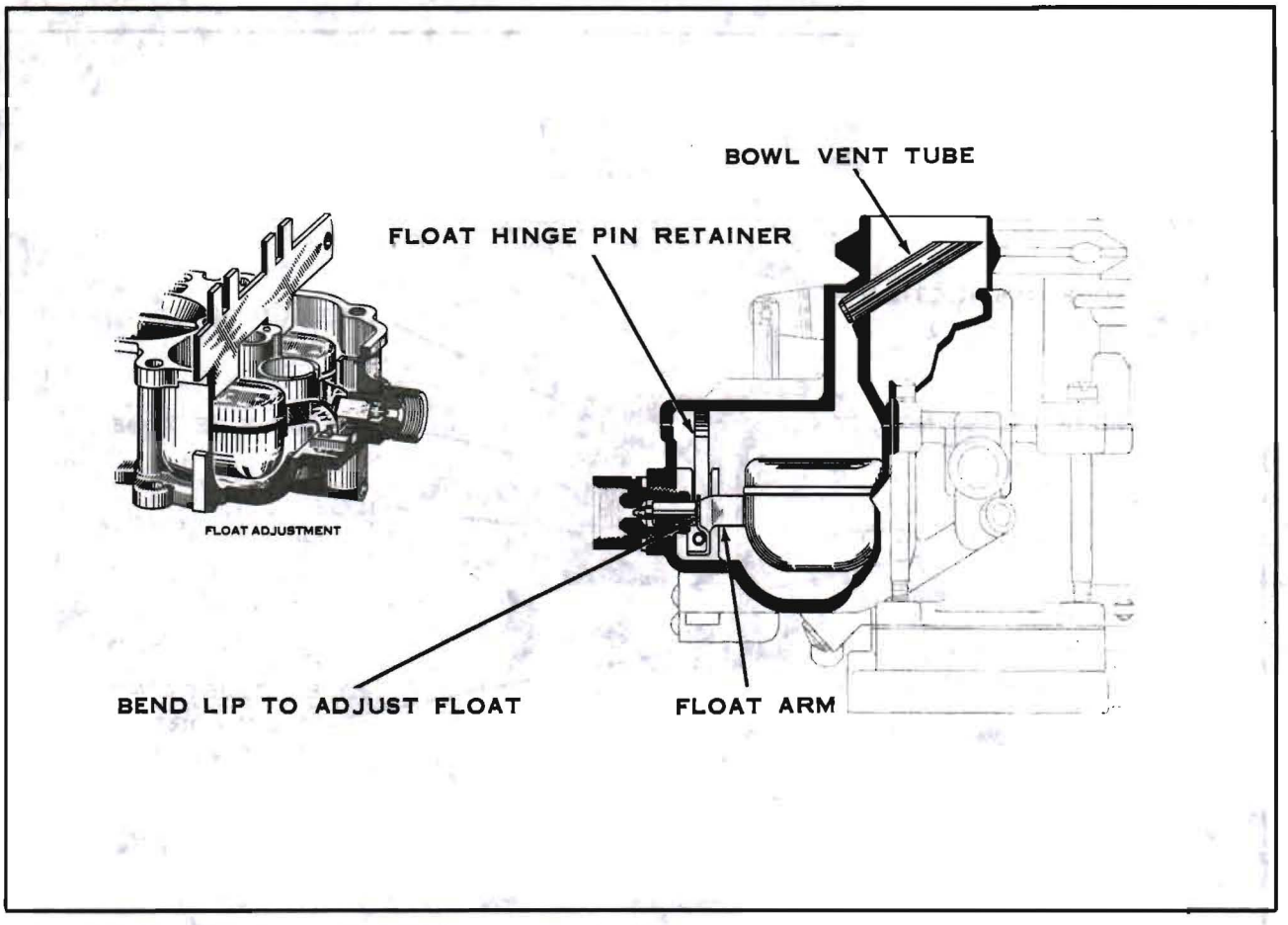

FLOAT CIRCUIT

The purpose of the float circuit is to maintain an adequate supply of fuel at the proper level in the bowl for use by the low-speed, high-speed, pump and choke circuits. The twin floats, which follow the contours of the fuel bowl, are designed to provide a stable fuel supply under all operating conditions. Only a minimum of fuel is maintained in the carbureter, preventing excessive fuel vaporization and tending to improve warm engine starting.

Setting the float to specifications assures an adequate supply of fuel in the bowl for all operating conditions. Float adjustment must be made with the bowl cover gasket, and float pin retainer removed. Hold the lip on the float arm against the seated intake needle, making sure the hinge pin is at the bottom of its guide slots. The float setting is measured from the top surface of the bowl to the top of each float shell. If both floats require the same correction, adjust by bending lip on float arm. If one float is lower than the other, equalize by bending the float arm. The floats must not rub anywhere against the inner walls of the bowl. If necessary, bend float arm slightly to provide clearance on all sides of float shells.

Inspect the intake needle and seat, and float assembly for wear. The carbureter bowl should be clean and free of dirt, gum or other foreign matter.

The bowl is vented to the inside of the air horn. The bowl vent is calibrated to provide proper air pressure above the fuel at all times. To assure a positive seal, always use a new bowl cover gasket when reassembling. An air leak at this point can result in a mileage complaint.

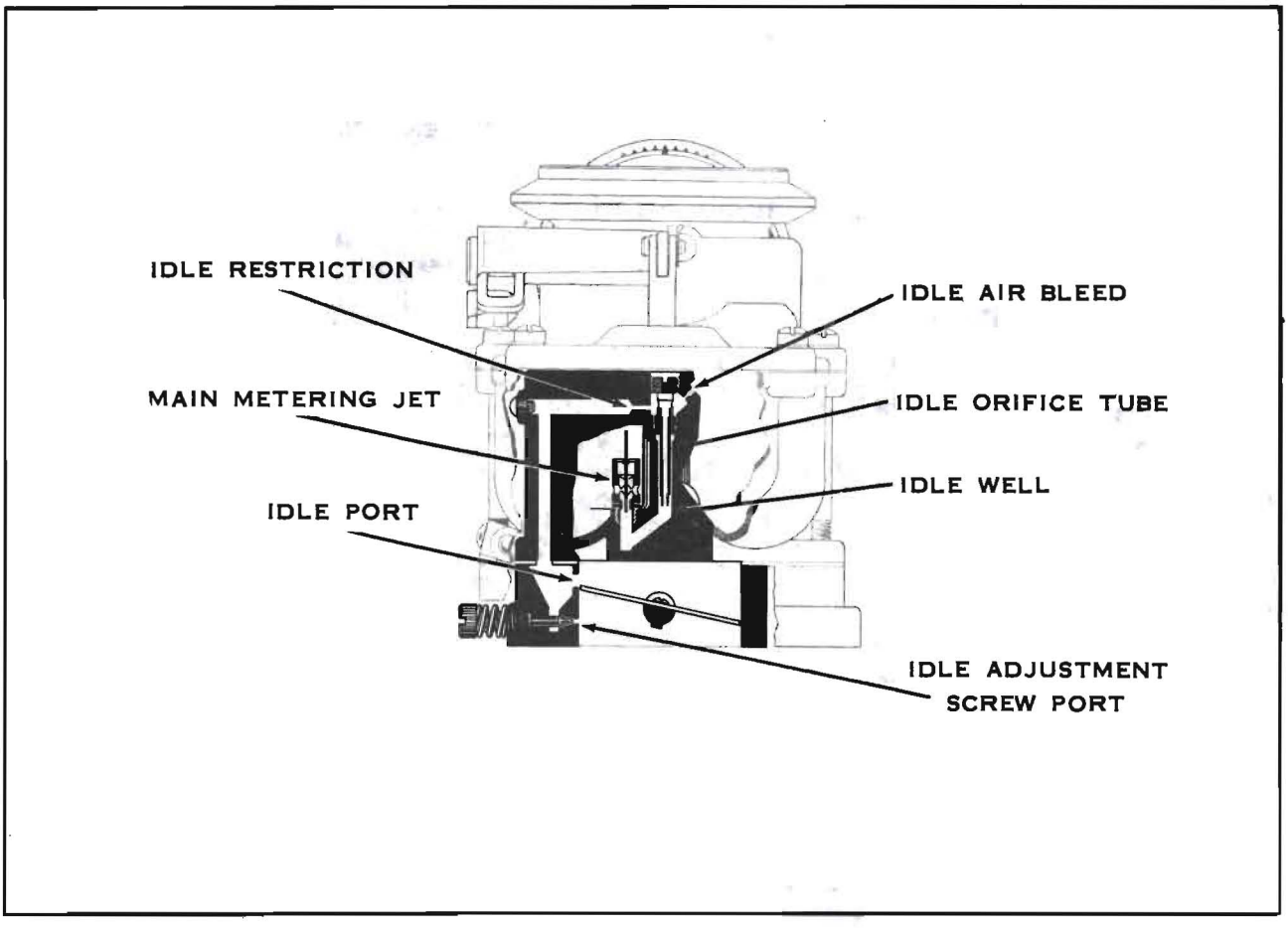

LOW-SPEED CIRCUIT

Fuel for idle and early part throttle operation is metered through the low-speed circuit.

Fuel enters the idle well through the main metering jet. The idle orifice tube meters the amount of fuel for idle and early part throttle operation. The idle air bleed and idle restriction are carefully calibrated and serve to break up the liquid fuel and mix it with air as it moves through the passage to the idle port and idle adjustment screw port. Turning the idle adjustment screw toward its seat reduces the quantity of fuel mixture supplied by the idle circuit.

The idle port is slot shaped. As the throttle valve is opened, more of the idle port is uncovered allowing a greater quantity of fuel and air mixture to enter the carbureter bore.

The idle air bleed, idle restriction, idle orifice tube, idle port, idle adjustment screw port, as well as the bore of the carbureter flange, must be clean and free of dirt and carbon. Obstructions will cause poor low-speed engine operation. A worn or damaged idle adjustment screw or idle orifice tube should be replaced.

Air leakage at the gasketed surface surrounding the low-speed mixture passages or between the flange and manifold may cause poor idle and low-speed operation. Tighten bowl cover to flange attaching screws and flange to manifold stud nuts evenly and securely to avoid distorting castings. Always use new gaskets.

Idle air bleed and restriction bushings are pressed in place and should not be removed in service. Use care in handling the carbureter during servicing to avoid damaging the throttle valve as the throttle valve projects below the flange in open throttle position.

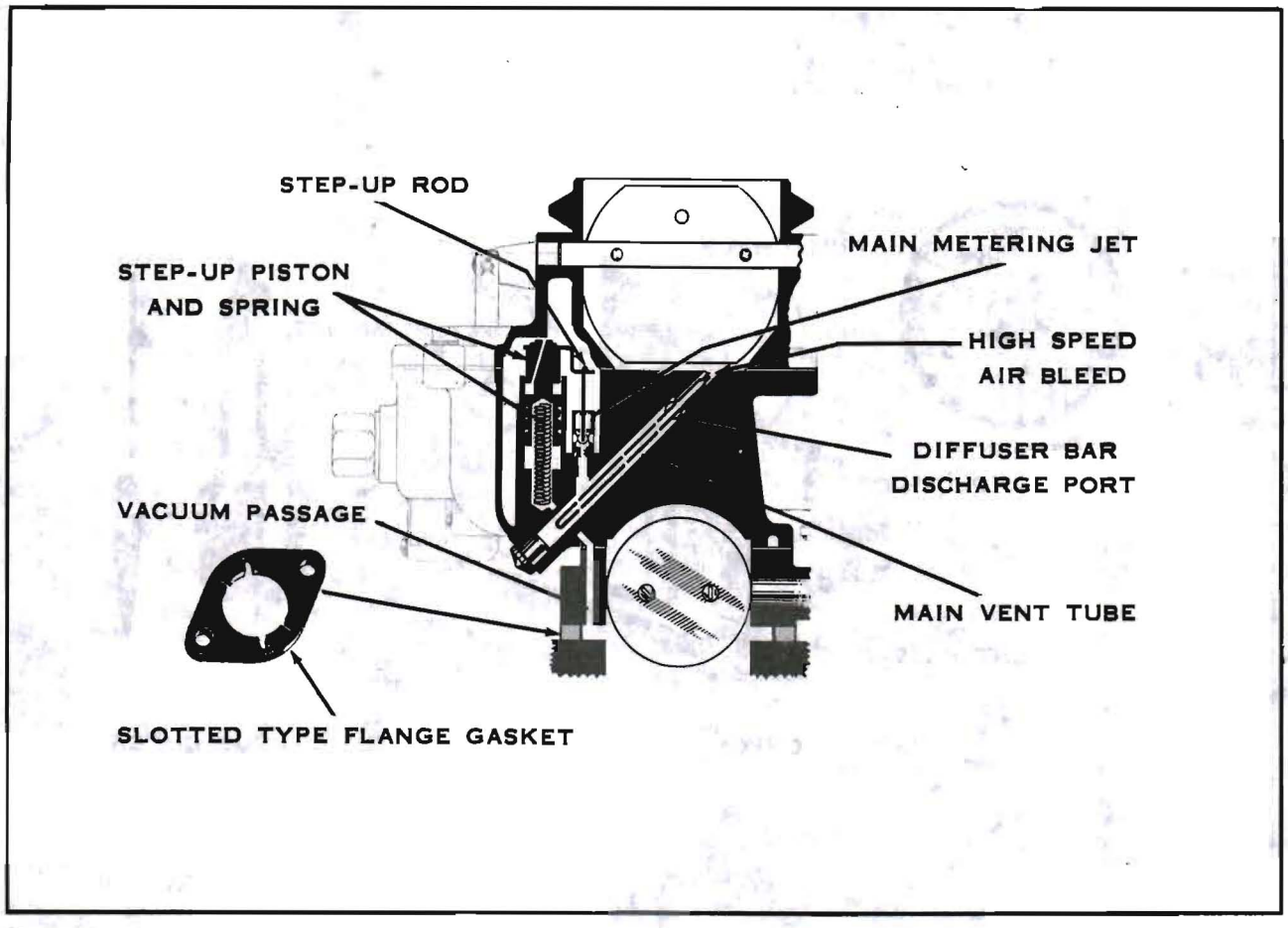

HIGH-SPEED CIRCUIT

Fuel for part throttle and full throttle operation is supplied through the high-speed circuit.

The position of the step-up rod in the main metering jet controls the amount of fuel admitted to the diffuser bar discharge ports. The position of the step-up rod is controlled by manifold vacuum applied to the vacuum piston.

During part throttle operation, manifold vacuum pulls the step-up piston and rod assembly down, holding the step-up rod in the main metering jet. This is true at all times that the vacuum under the piston is strong enough to overcome the tension of the step-up piston spring. Fuel is then metered around the step-up rod in the jet.

Under any operating condition, when the tension of the spring over-comes the pull of vacuum under the piston, the step-up rod will move out of the jet into the wide-open throttle or power position. This allows additional fuel to be metered through the jet. The step-up rod does not require adjustment.

The main vent tube mixes air drawn through the high-speed air bleed with the fuel before it passes out of the diffuser bar discharge ports.

A clogged main vent tube may cause excessively rich mixtures. A special service tool is available to remove and replace the main vent tube. Care should be used in removing and inserting the new vent tube to avoid breakage and assure the tube seating tightly in the casting.

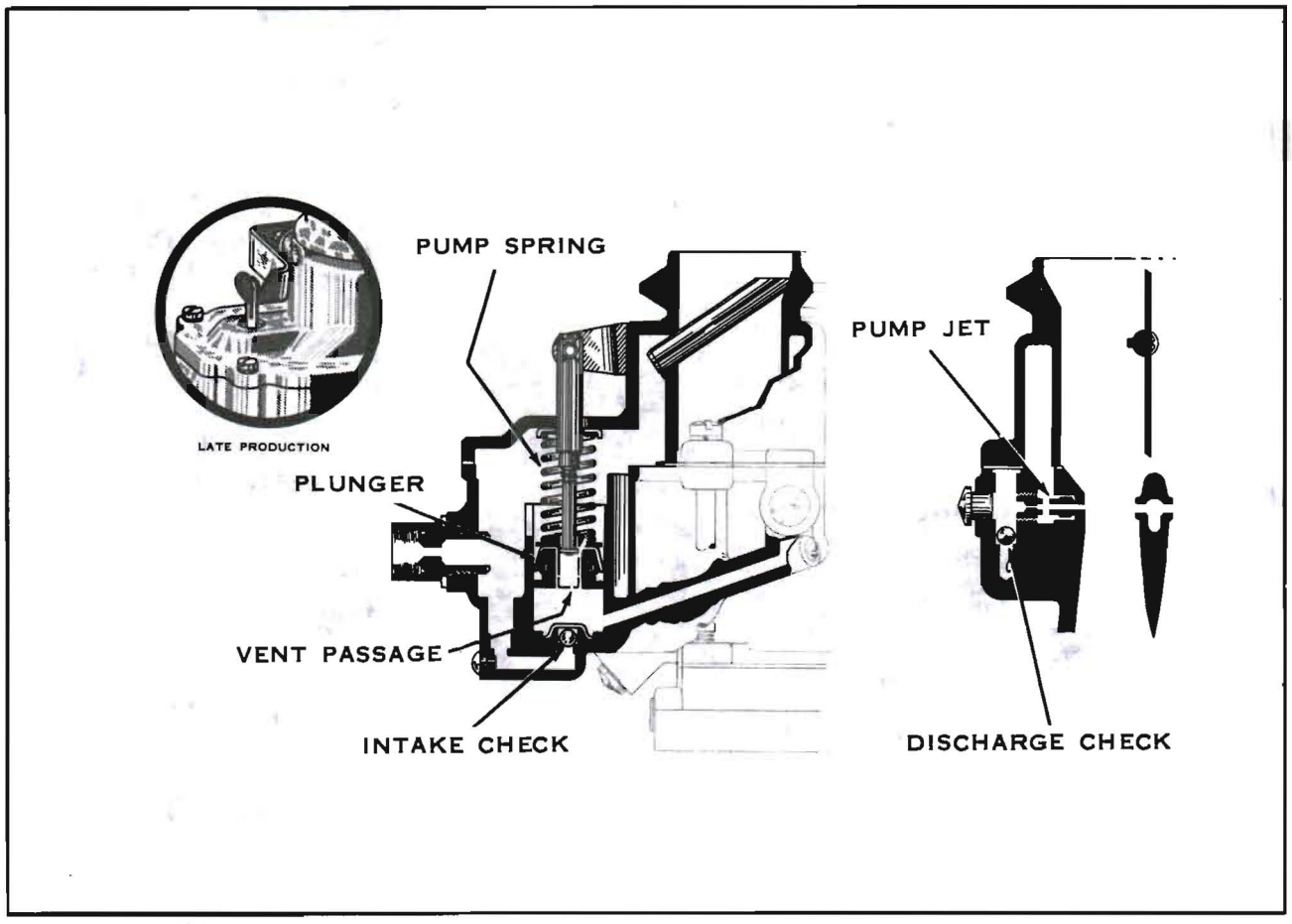

PUMP CIRCUIT

The accelerating pump circuit provides a measured amount of fuel, which is necessary to assure smooth engine operation for acceleration.

When the throttle is closed, the pump plunger moves upward in its cylinder and fuel is drawn into the cylinder through the intake check. The discharge check is seated at this time to prevent air being drawn into the cylinder. When the throttle is opened, the pump plunger moves downward forcing fuel out through the discharge passages, past the discharge check and out of the pump jet. When the plunger moves downward, the intake check is closed preventing fuel from being forced back into the bowl.

When the throttle is opened, the pump spring moves the piston to force the fuel through the pump discharge jet. The calibration of the pump spring and the size of the jet provide a pump discharge of the desired duration.

During high-speed operation a vacuum exists at the pump jet. To prevent fuel from being drawn through the pump circuit, the pump jet air bleed is vented by a passage in the air horn to the carbureter bowl vent tube. This prevents fuel from being drawn through the pump jet.

Fuel vapor pressure in the pump circuit caused by heat is relieved through the calibrated vent passage in the pump plunger.

The accelerating pump adjustment provides a means for securing proper pump discharge. This adjustment should be made as instructed on the parts and service specification sheet for each model carbureter. The pump setting is measured from bowl cover to the top of the pump plunger. Adjustment is made by bending the connector rod at the lower angle.

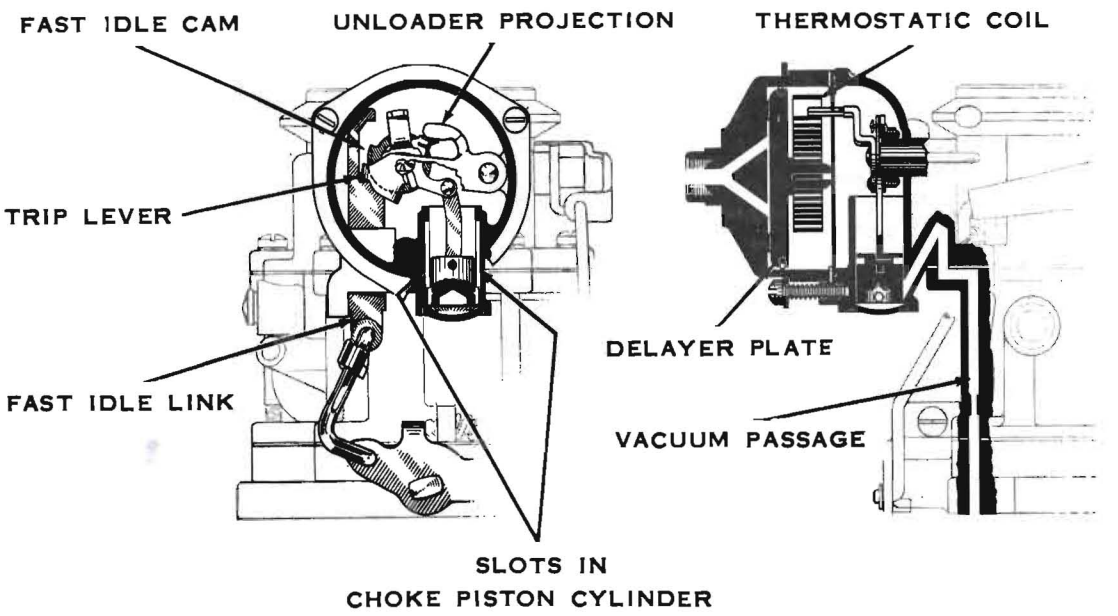

CLIMATIC® CONTROL CHOKE CIRCUIT

The Climatic® Control circuit provides a correct mixture necessary for quick cold-engine starting and warm-up.

When the engine is cold, tension of the thermostatic coil holds the choke valve closed. When the engine is started, air velocity against the offset choke valve causes the valve to open slightly against the thermostatic coil tension. Intake manifold vacuum applied to the choke piston also tends to pull the choke valve open. The choke valve assumes a position where tension of the thermostatic coil is balanced by the pull of vacuum on the piston and force of the air passing through the air horn against the offset valve.

When the engine starts, slots located in the sides of the choke piston cylinder are uncovered allowing intake manifold vacuum to draw warm air heated by the exhaust manifold, through the Climatic® Control housing. The flow of warm air in turn heats the thermostatic coil and causes it to lose some of its tension. The thermostatic coil loses its tension gradually until the choke valve reaches full-open position.

If the engine is accelerated during the warm-up period, the corresponding drop in manifold vacuum allows the thermostatic coil to momentarily close the choke, providing a richer mixture.

During the warm-up period it is necessary to provide a fast idle speed to prevent engine stalling. This is accomplished by a fast idle cam connected to the choke shaft. The choke trip lever contacts the fast idle cam. The fast idle link attached to the throttle lever contacts the choke trip lever, and prevents the throttle valve from returning to a normal warm engine idle position while the Climatic® Control is in operation.

If during the starting period the engine becomes flooded, the choke valve may be opened manually to clean out any excessive fuel in the intake manifold. This may be accomplished by depressing the accelerator pedal to the floor mat and engaging the starter. The unloader projection on the fast idle link will contact the unloader lug on the choke trip lever and in turn partially open the choke valve. To prevent over-choking a warm engine, the heat retaining delayer plate prevents the thermostatic coil from cooling off too quickly and bringing the Climatic® Control into operation before it is needed.