CARTER

POWER CENTER

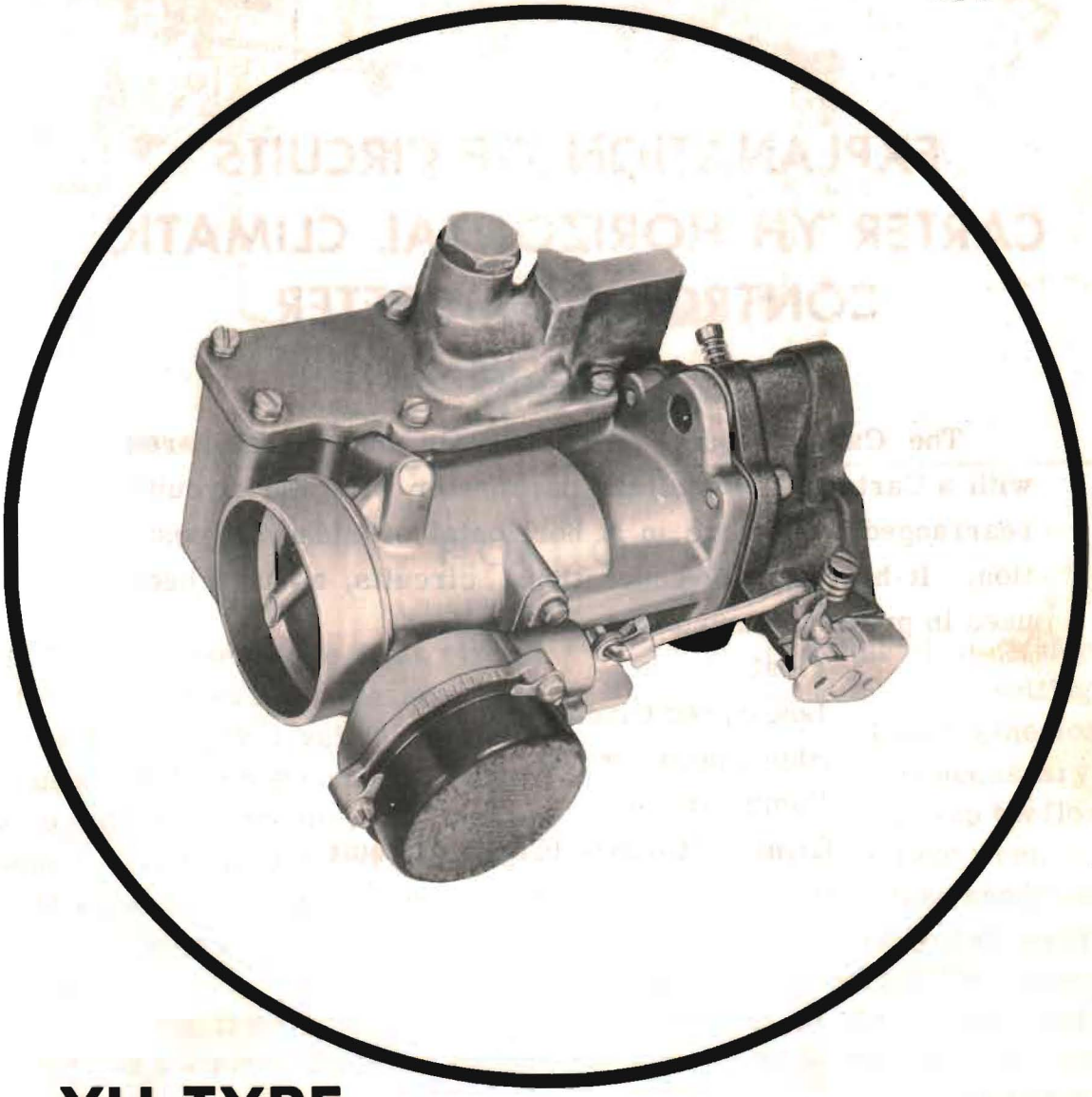

YH TYPE

CARBURETER

CARTER CARBURETOR CORPORATION, ST. LOUIS, MO., U. S. A.

Form 3573

EXPLANATION OF CIRCUITS CARTER YH HORIZONTAL CLIMATIC CONTROL CARBURETER

The Carter Model YH carbureter may be compared with a Carter YF downdraft carbureter with the circuits rearranged to operate in a horizontal or sidedraft position. It has five (5) conventional circuits, as have been used in previous carbureters. They are:

Float Circuit
Low-Speed Circuit
High-Speed Circuit
Pump Circuit
Climatic Control (Choke) Circuit

Printed In U.S.A.

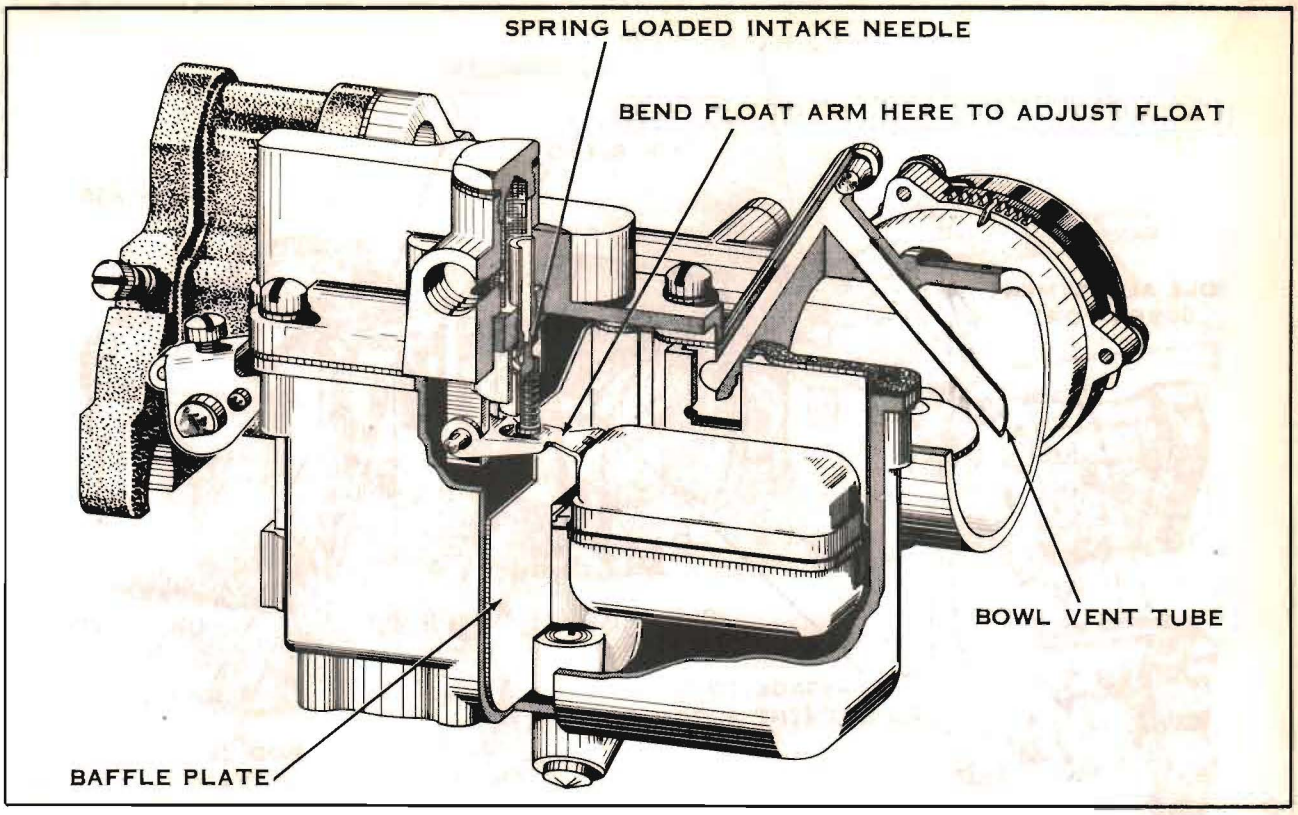

FLOAT CIRCUIT

The purpose of the float circuit is to maintain an adequate supply of fuel at the proper level in the bowl for use by the low-speed, high-speed, pump and choke circuits. The spring loaded intake needle and the fuel baffle plate is designed to provide a stable fuel supply under all operating conditions.

Setting the float to specifications assures an adequate supply of fuel in the bowl for all operating conditions. Float adjustment must be made with the bowl cover gasket removed and the bowl cover held inverted and level at eye height with the free weight of the float resting on the pin in the intake needle. An incorrect float setting will result if the bowl cover is not held level, or the float is depressed when gauging the float setting. Adjust the float by bending the float arm. To avoid placing unnecessary strain on the float do not grasp the float shell when bending the float arm.

Inspect the intake needle and seat, and float assembly for wear. The carbureter bowl and the intake strainer screen should be clean and free of dirt, gum, or other foreign matter.

The bowl is vented to the inside of the air horn. The bowl vent is calibrated to provide proper air pressure above the fuel at all times. To assure a positive seal, always use a new bowl cover gasket when reassembling. An air leak at this point can result in a mileage complaint.

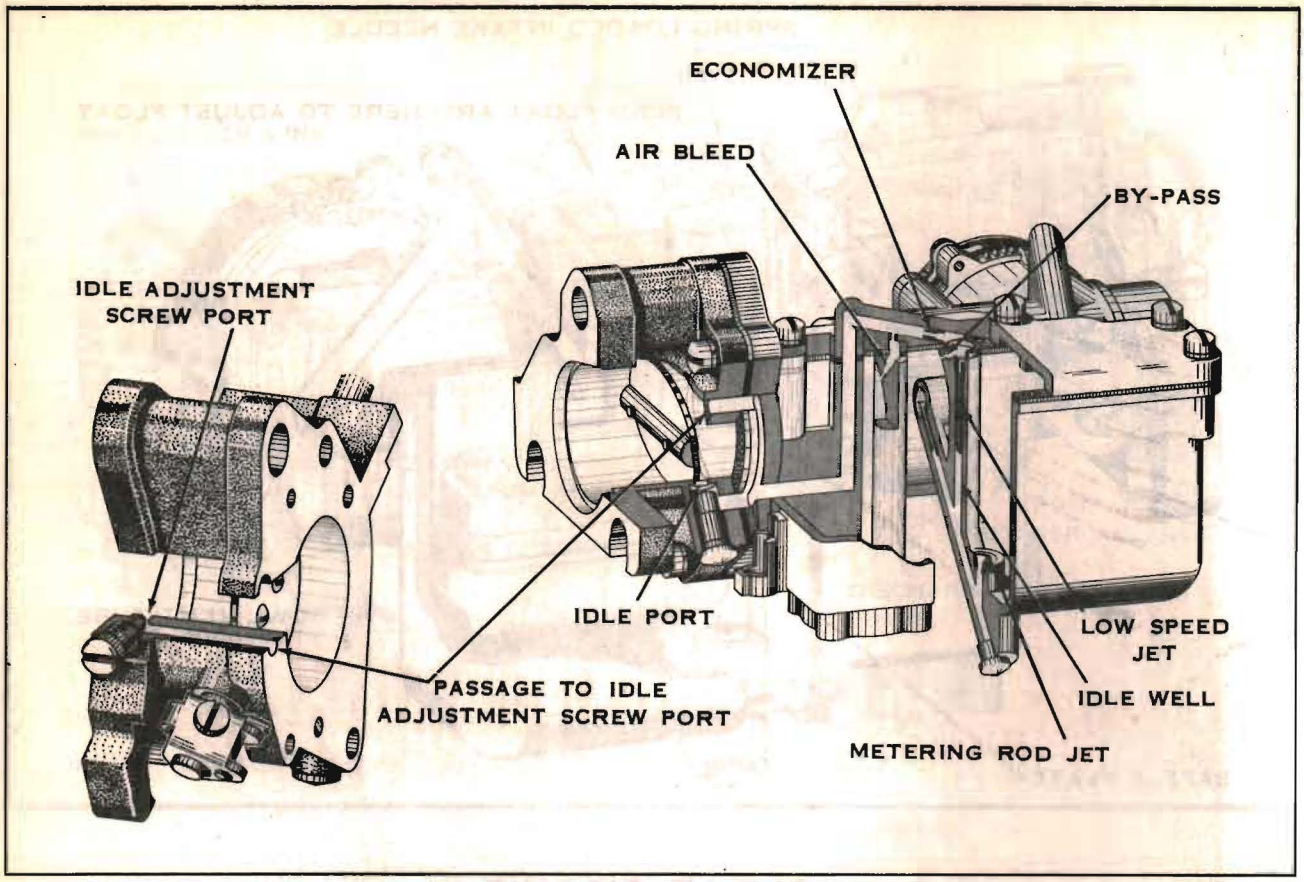

LOW-SPEED CIRCUIT

Fuel for idle and early part throttle operation is metered through the low-speed circuit.

Gasoline enters the idle well through the metering rod jet. The low-speed jet measures the amount of fuel for idle and early part throttle operation. The air by-pass, economizer, and idle air bleed are carefully calibrated and serve to break up the liquid fuel and mix it with air as it moves through the passage to the idle port and idle adjustment screw port. Turning the idle adjustment screw toward its seat reduces the quantity of fuel mixture supplied by the idle circuit.

The idle port is slot shaped. As the throttle valve is opened more of the idle port is uncovered allowing a greater quantity of gasoline and air mixture to enter the carbureter bore.

The by-pass, economizer, idle port, idle adjustment screw port, as well as the bore of the carbureter flange must be clean and free of carbon. Obstructions will cause poor low-speed engine operation. Worn or damaged idle adjustment screws or low-speed jets should be replaced.

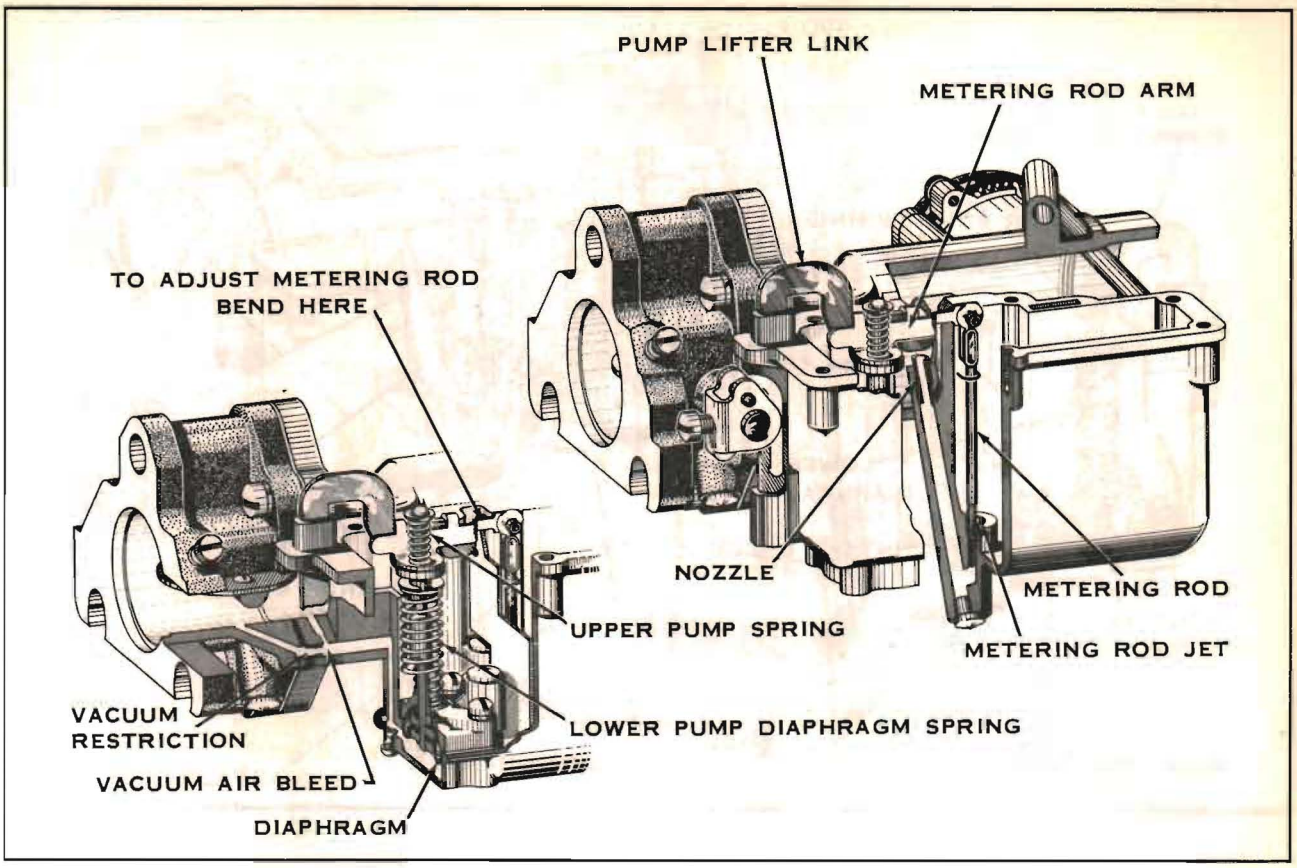

HIGH-SPEED CIRCUIT

Fuel for part throttle and full throttle operation is supplied through the high-speed circuit.

The position of the metering rod in the metering rod jet controls the amount of fuel admitted to the high-speed nozzle. The position of the metering rod is dual controlled, mechanically, by movement of the throttle and by manifold vacuum applied to the diaphragm.

During part throttle operation manifold vacuum pulls the diaphragm assembly down holding the metering rod arm against the pump lifter link. Movement of the metering rod will then be controlled by the pump lifter link, which is connected to the throttle shaft. This is true at all times that the vacuum under the diaphragm is strong enough to overcome the tension of the lower pump diaphragm spring. The upper pump spring serves as a bumper upon deceleration and a delayed action spring on acceleration.

Under any operating condition, when the tension of the lower pump diaphragm spring overcomes the pull of vacuum under the diaphragm, the metering rod will move toward the wide open throttle or power position.

The restriction and air bleed in the vacuum passage, provide a lower and more uniform vacuum condition in the chamber below the diaphragm.

The main nozzle is permanently installed and must not be removed in service.

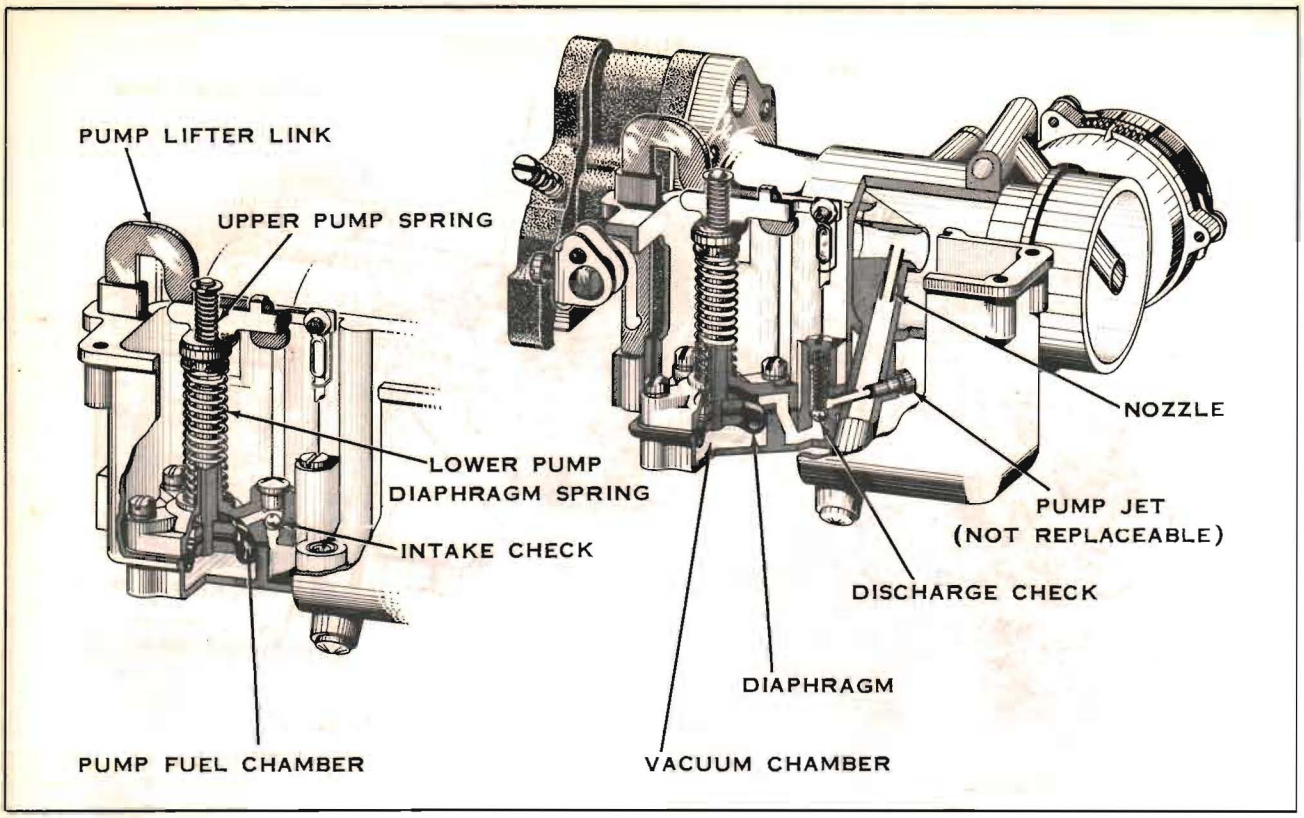

PUMP CIRCUIT

The accelerating pump circuit provides a measured amount of fuel, which is necessary to insure smooth engine operation for acceleration at speeds below approximately 30 MPH.

Accelerating pump action is controlled both mechanically and by manifold vacuum in the same manner as the metering rod. When the throttle is closed, the diaphragm moves downward and fuel is drawn into the pump fuel chamber through the intake check. The discharge check is seated at this time to prevent fuel from the nozzle passage being drawn into the pump chamber. When the throttle is opened, the diaphragm moves upward forcing fuel out through the discharge passage, past the discharge check, and out of the pump jet, which directs the fuel up the nozzle passage and out the end of the nozzle. When the diaphragm moves upward, the intake check is closed preventing fuel from being forced back into the bowl.

If the throttle is opened suddenly, the upper pump spring will be compressed resulting in a smoother pump discharge of longer duration.

Manifold vacuum is applied to the underside of the diaphragm at all times the engine is in operation. When manifold vacuum decreases to the point where the lower pump diaphragm spring overcomes the pull of vacuum, the diaphragm moves upward and a pump discharge results.

The pump jet is pressed into the casting during manufacture, and must not be removed in service. Be sure the diaphragm is in good condition and the intake and discharge checks are free of lint or other foreign matter.

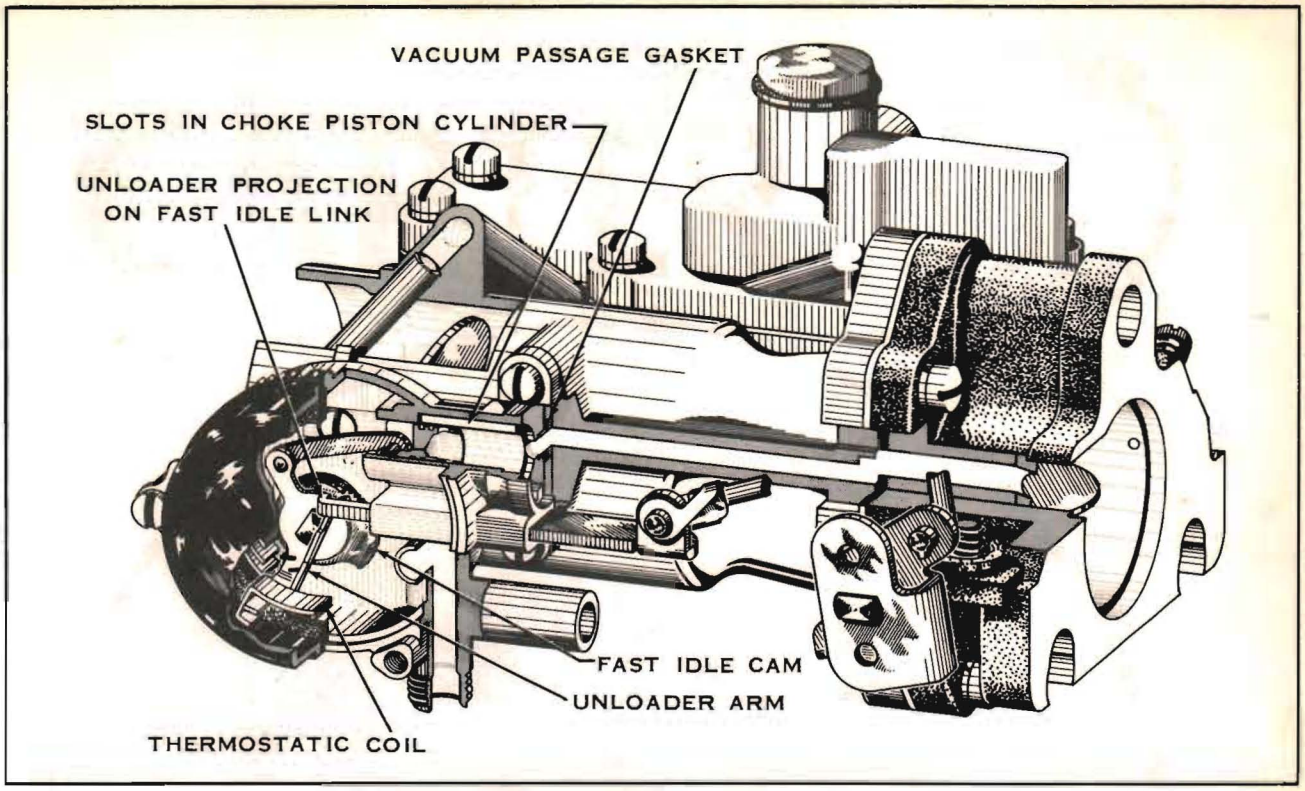

CLIMATIC CONTROL CHOKE CIRCUIT

The climatic control circuit provides a correct mixture necessary for quick cold engine starting and warm up.

When the engine is cold, tension of the thermostatic coil spring holds the choke valve closed. When the engine is started, air velocity against the offset choke valve causes the valve to open slightly against the thermostatic spring tension. Intake manifold vacuum applied to the choke piston also tends to pull the choke valve open. The choke valve assumes a position where tension of the thermostatic spring is balanced by the pull of vacuum on the piston and force of air velocity on the offset valve.

When the engine starts, slots located in the sides of the choke piston cylinder are uncovered allowing intake manifold vacuum to draw warm air heated by the exhaust manifold, through the climatic control housing. The flow of warm air in turn heats the thermostatic spring and causes it to lose some of its tension. The thermostatic spring loses its tension gradually until the choke valve reaches full-open position.

If the engine is accelerated during the warm-up period, the corresponding drop in manifold vacuum allows the thermostatic spring to momentarily close the choke, providing a richer mixture.

During the warm-up period it is necessary to provide a fast idle speed to prevent engine stalling. This is accomplished by a fast idle cam connected to the choke shaft. The fast idle link attached to the throttle lever contacts the fast idle cam and prevents the throttle valve from returning to a normal warm engine idle position while the climatic control is in operation.

If during the starting period the engine becomes flooded, the choke valve may be opened manually to clean out any excessive fuel in the intake manifold. This may be accomplished by depressing the accelerator pedal to the floor mat and engaging the starter. The unloader projection on the fast idle link will contact the unloader arm on the choke shaft and in turn partially open the choke valve.