CARBURETOR SERVICE MANUAL

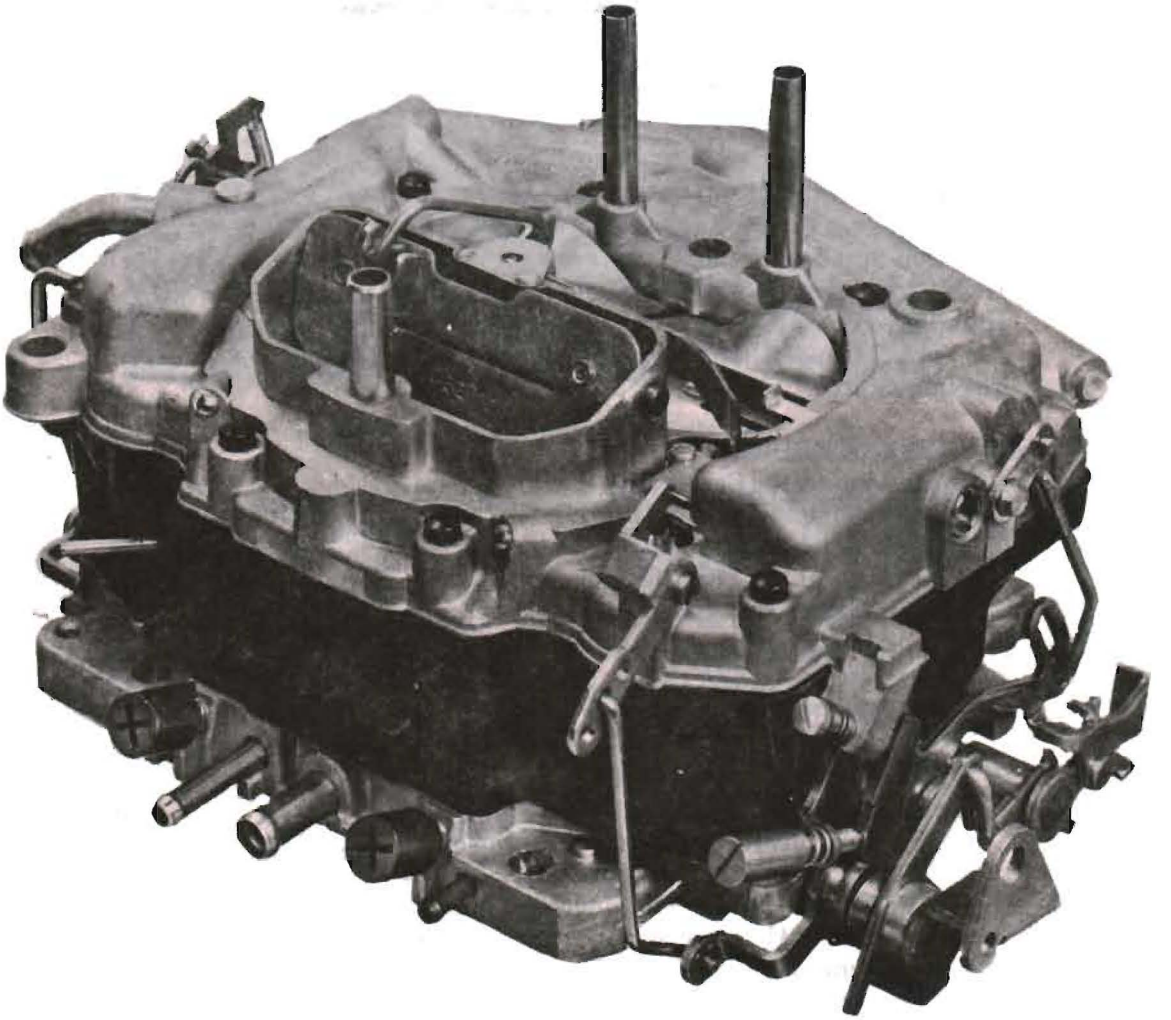

SOLID FUEL THERMO·QUAD®

PRICE 50¢

CARTER®

SOLID FUEL THERMO-QUAD CARBURETOR

TABLE OF CONTENTS

Copyright © 1972
ACF Industries Inc.
Carter Carburetor Div.
All Rights Reserved

Form 3623
Printed in U.S.A.

GENERAL DESCRIPTION

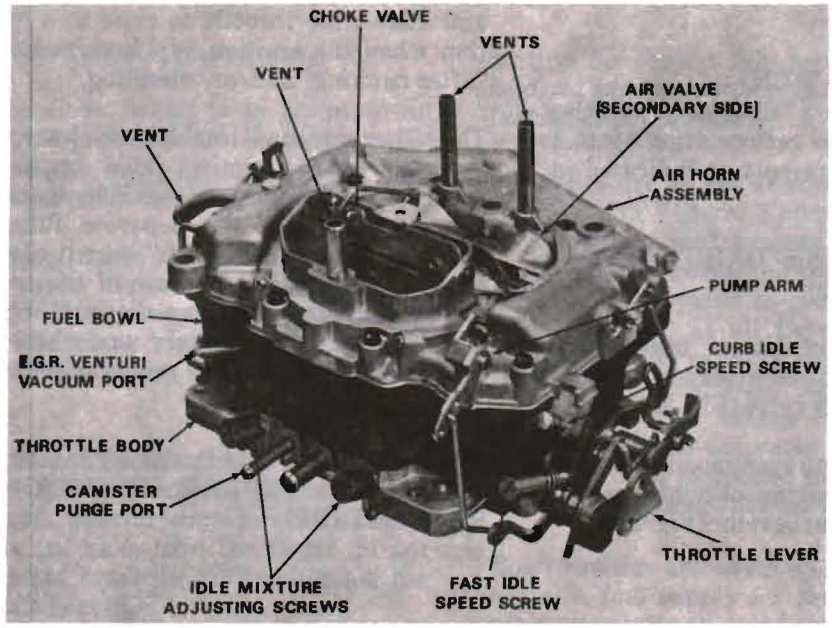

Figure 1. The Carter Thermo-Quad Carburetor

The Carter Thermo-Quad is a new type of carburetor designed to help reduce exhaust emissions and to permit the maximum performance that high-output engines are capable of delivering. (See figure 1.)

Essentially the design innovations incorporated into the Thermo-Quad culminate in a much higher degree of temperature control. The results were so effective that the Thermo-Quad runs as much as 20° cooler than all metal carburetors.

Performance oriented technicians understand immediately that a cooler carburetor keeps the fuel in the liquid state where it is supposed to be liquid — and vaporized when supposed to be vapor. He also knows that heat expands both liquid and vapor, and that a "cooler-fed" engine will produce more power. Expansion should occur inside an engine — not outside.

Three basic assemblies make up the Thermo-Quad: the throttle body, fuel bowl and bowl cover. The throttle body is a high-grade aluminum casting and contains the throttle valves, linkages and idle mixture screws. The bowl cover is also an aluminum casting and contains essentially all metering components, and because of this feature it is often referred to as a "suspended" design. Between the throttle body and bowl cover is a phenolic resin fuel bowl that possesses very high insulating characteristics. Consequently heat from the engine which would normally envelop the entire carburetor, is blocked by the plastic fuel bowl, thus permitting the metering section (bowl cover) to remain much cooler than conventional all metal carburetors.

When a Thermo-Quad equipped vehicle is driven conservatively, the smaller diameter primary bores maintain high air intake velocity consistent with maximum operating economy — but when extra power is needed and the larger diameter secondary throttle valves are opened, a virtually unrestricted supply of air-fuel mixture is admitted to the engine. There are no fixed venturis in the secondary bores, however the venturi effect is provided by the spring-loaded air valve in the secondary section. This valve is accurately referred to as "variable venturi."

Five conventional circuits common to all Carter Carburetors are found in the Thermo-Quad:

Two float circuits
One low-speed circuit (in the primary side)
Two high-speed circuits
One pump circuit
One choke circuit (consisting of linkages to operate from a choke mechanism in the manifold cavity).

The Thermo-Quad air horn houses the choke valve, air valve for the secondaries and its controls and adjustments, the fuel inlet system (two floats and inlet needles and seats) the complete accelerating pump system, primary boost venturi, vacuum controlled step-up piston and rods, low and high speed fuel metering systems (secondary jets, fuel discharge nozzles and all air bleeds and restrictions). The Primary jets are in the main body.

A hot-idle compensator valve is located in the throttle body on some models. This valve is a thermostatically-operated air bleed, to relieve an overrich condition at idle in case of abnormally high temperatures.

VACUUM PORT IDENTIFICATION

All Thermo-Quad carburetors used on vehicles equipped with the exhaust gas recirculation system will have an additional vacuum port as indicated in Figure 1 and 8.

The Exhaust Gas Recirculation (EGR) system is controlled by one of two systems.

(1) The venturi vacuum control system, used on the standard 440 CID engine requires a port in the side of carburetor above the throttle valve (Fig. 8).

(2) The ported vacuum control system, used on the high performance 440 CID engine obtains vacuum from a port in the base of the carburetor (Fig. 8).

A curb idle speed solenoid is mounted on the choke side of the carburetor or on the throttle lever side of the intake manifold. This solenoid is used to maintain a high idle speed when the engine is running and allows the throttle to close to a low speed position when the ignition key is turned off, to prevent "after running" and/or "dieseling."

The Thermo-Quad carburetor has many unique features which require extra caution during all adjustments. For example: The vacuum kick diaphragm provides two separate functions. It still provides for vacuum "kick", but it also controls the secondary air valve. Because of the separate nature of the two functions, two distinct but inter-related adjustments are necessary and these adjustments must be performed in the proper sequence.

THE THERMO-QUAD MEETS ALL REQUIREMENTS OF FEDERAL EMISSION CONTROL REGULATIONS.

All specifications found in this book pertain to the solid fuel metering system Thermo-Quad installed as original equipment on the late 1971, 1972, 1973 340, 400, and 440 CID Chrysler Corporation Cars.

CARBURETOR CIRCUITS

The Float Circuit (See figure 2.)

The purpose of the float circuit is to maintain an adequate supply of liquid fuel at the proper, predetermined level in the bowl for use by the low-speed, high-speed, pump and choke circuits.

Two separate float circuits are used, each circuit containing a fuel cavity float assembly and needle and seat assembly. The primary low-speed circuit plus primary and secondary high-speed circuits are supplied with fuel taken from the fuel cavities in the fuel bowl.

Setting the floats to specifications assures an adequate supply of fuel in the bowl cavities for all operating conditions. Special consideration should be given in service to make sure the floats do not bind in their hinge pin brackets or drag against the inner walls of the bowl cavities.

The intake needle seats are installed at an angle to provide the best possible seating action commensurate with float movement.

Intake needles and seats are carefully matched during manufacture. Do not use the left-hand needle in the right-hand seat, or vice-versa. In order to avoid unnecessary bending, both floats should be reinstalled in their original positions prior to adjusting for correct fuel level. Dimensions are given by float position rather than attempting to measure fuel height in the bowl.

All vents are to the inside of the air horn in compliance with Federal Emission Control Regulations. A connecting vent passage effects a balance of the air pressure between the two bowl cavities, thus bowl vents are calibrated to provide proper air pressure above the fuel at all times. A mechanically operated bowl vent valve is located at the top of one of the bowl cavities. With the engine at curb idle, the primary throttle linkage opens the valve to allow vapors to exit to the vapor storage system. As soon as the throttle is opened this valve is closed and remains closed except at curb idle.

Bowl cavities are as small as practicable to provide a stable fuel supply for the primary and secondary main jets under all operating conditions.

The carburetor bowl should be clean and free of dirt, gum or other foreign material. To assure a positive seal, the gasket surface of the castings must be free of nicks and burrs. An air or fuel leak at these points can result in a mileage complaint and cutting out on sharp turns or sudden stops. A new air horn gasket should be used each time the bowl cover assembly is removed for servicing operations.

FLOAT CIRCUIT

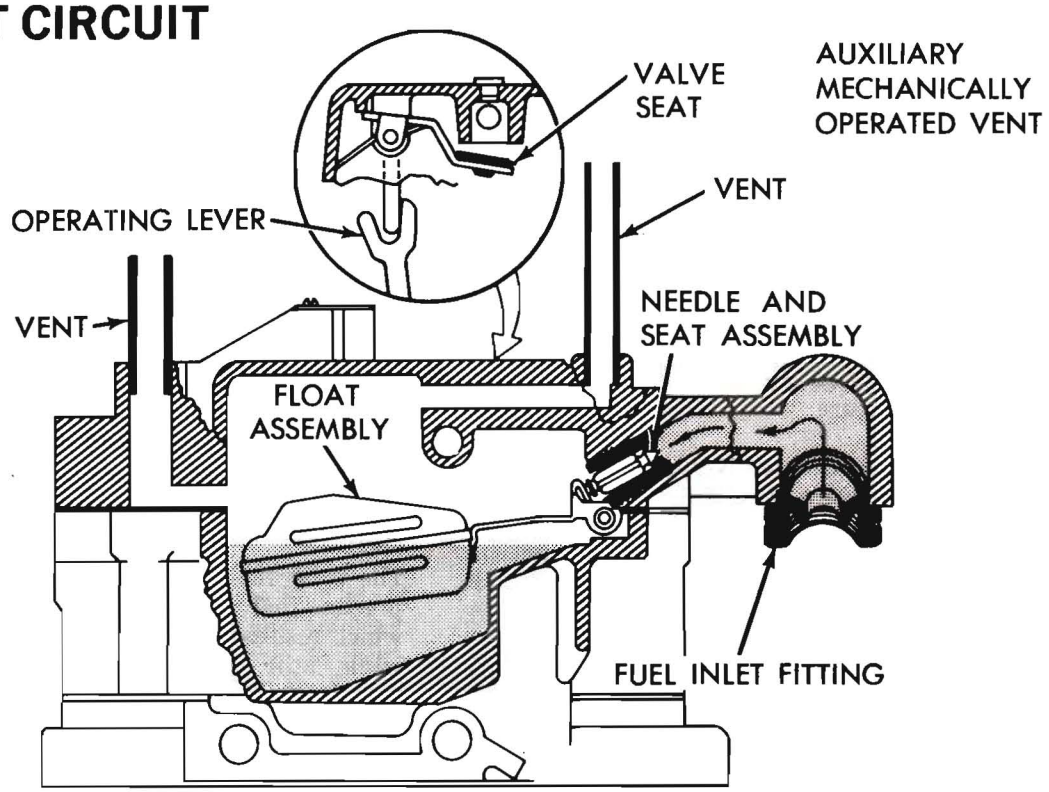

Figure 2. The Thermo-Quad Float Circuit—Slide 2172

LOW-SPEED CIRCUIT

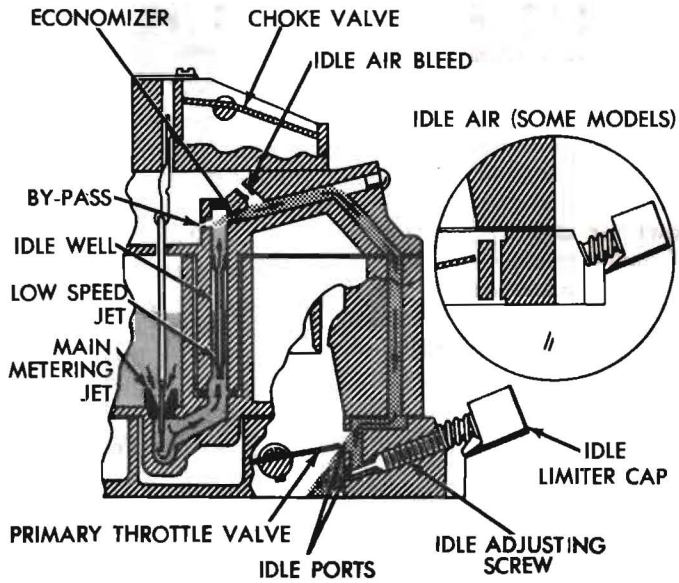

Figure 3. The Thermo-Quad Low-Speed Circuit—Slide 2173

The Low-Speed Circuit (See figure 3.)

Fuel for idle and early part throttle operation is metered through the low-speed circuit which is located on the primary side only.

Liquid gasoline enters the idle wells through the main metering jets. Each low-speed jet has a calibrated orifice at its lower tip which measures the amount of fuel for idle and early part throttle operation. The air by-pass passages, economizers and idle air bleeds are carefully calibrated and serve to break up the liquid fuel and mix it with air as it moves through the passages to the idle ports and idle adjustment screw ports. Turning the idle adjustment screws toward their seats reduces the quantity of fuel mixture supplied by the idle circuit. This is an over-rich mixture that emerges from the ports, but is leaned to a proper combustible mixture by the air that enters the engine manifold around the "cracked" primary throttle valve. Consequently, rotating the idle adjusting screw inward leans the idle low-speed mixture and rotating it outward enriches the idle mixture.

The idle ports, located directly above the idle-adjusting screw ports, are slot shaped. As the throttle valves are opened, more of the idle ports are uncovered, allowing a greater quantity of the fuel-air mixture to enter the carburetor bores. The secondary throttle valves always remain seated at idle.

All by-passes, economizers, idle ports, idle adjustment screw ports, as well as the bore of the carburetor must be clean and free of carbon. Obstructions will cause poor low-speed engine operation. Worn or damaged idle adjusting screws or low-speed jets should be replaced.

The low-speed jet, air bleed, economizer and by-pass bushings are pressed in place and must never be removed when servicing the carburetor.

Air leakage at the gasketed surface surrounding the low-speed (idle) mixture passages or between the flange and manifold may cause poor idle and low-speed operation. Always use new gaskets when servicing the carburetor.

On vehicle models equipped with or without air conditioning systems a hot-idle compensator is installed in the throttle body. This component consists of a thermostatically controlled valve that opens a calibrated air passage between the engine manifold and the air horn to compensate for an over-rich idle condition, should temperatures become sufficiently high to produce higher than normal vaporization of fuel in the idle passages of the carburetor.

The High-Speed Circuits

Fuel for part throttle and full throttle engine operation is supplied through the high-speed circuit, which is divided into the primary high-speed circuit and secondary high-speed circuit. These two circuit functions are described separately, as follows:

High-Speed Circuit — Primary Side (See figure 4.)

The solid fuel nozzle design (uphill) provides more precise fuel metering and better nozzle control, which results in improved and lower emission levels, while still maintaining maximum response and performance with no sacrifice in fuel economy.

The position of the step-up rod in the main metering jet controls the amount of fuel admitted to the discharge nozzles. Each of the two step-up rods has

HIGH-SPEED CIRCUIT

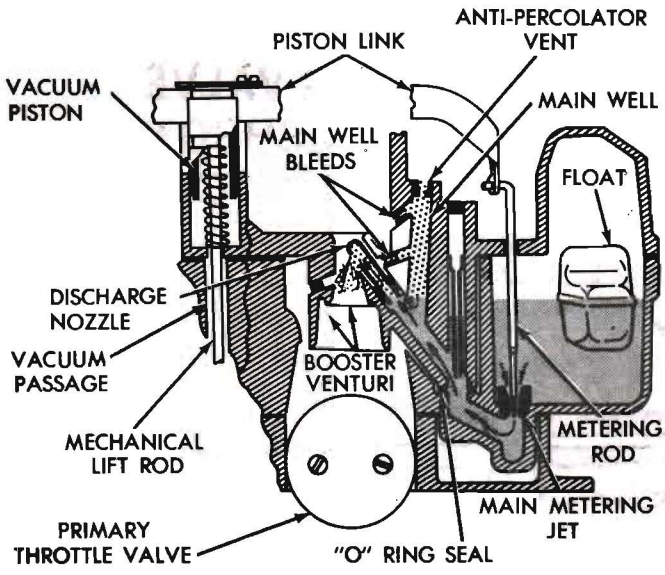

Figure 4. The Thermo-Quad High-Speed Circuit —Primary Side—Slide 2174

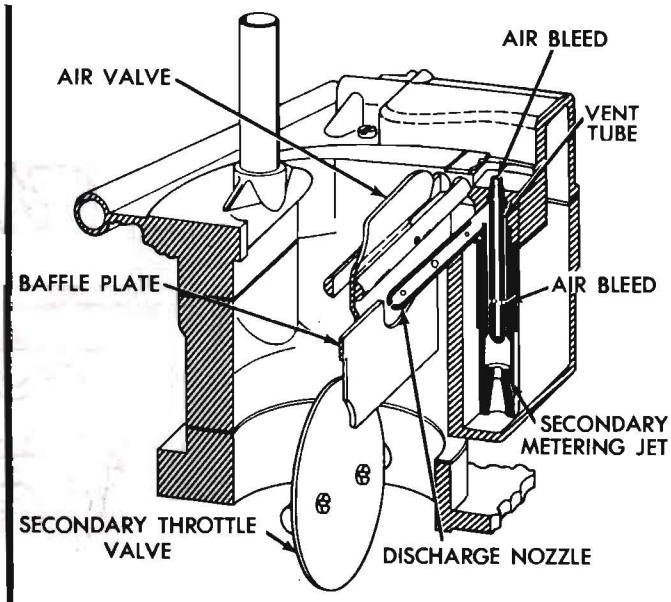

Figure 5. The Thermo-Quad High-Speed Circuit —Secondary Side—Slide 2175

varying step diameters at its lower end which controls the effective size of the main metering jet through which it operates.

In the primary metering section, the two metering rods are yoked to a single step-up piston which rides in a cylinder in the bowl cover casting. The primary jets which work with the metering rods are located in the phenolic resin fuel bowl. The step-up piston has a lift rod which extends down through a passage in the fuel bowl into the throttle body. The bottom end of the rod rides on a lever operated by a cam on the primary throttle shaft.

In the low-and medium-speed range, the cam and lever lift the step-up piston and metering rods in proportion to the primary throttle valve opening. This action provides positive mixture control.

Under high speed operating conditions, when the tension of the spring overcomes the pull of "vacuum" under the piston, the step-up rod will move up so its smaller diameter (power) step is in the jet. This permits the necessary additional fuel to be metered through the jet.

In addition to the metering action of the step-up rod in the main-metering jet, precise fuel-air measurements are constantly affected for every high-speed engine demand, by calibrated perforations in the vent tubes functioning in unison with the high-speed air bleeds between the vent tube wells and air horn. These particular air bleeds also serve as anti-percolator vents, with engine stopped or at idle, by permitting vapors to escape that might otherwise build up and force raw fuel through the nozzle into the intake manifold and produce more difficult hot starting.

High-Speed Circuit — Secondary Side (See figure 5.)

Liquid fuel for the high-speed circuit in the secondary portion of the carburetor is metered at the secondary metering jets. There are no step-up rods in the secondary metering jets.

The main vent tubes in the secondary side with their calibrated perforations and air bleeds, function to provide sensitively calibrated air-fuel mixtures in response to engine demands.

A spring-loaded air valve is located in the secondary side of the carburetor which is opened by air velocity through the secondary bores and closed by accurately-adjusted spring tension. A unique feature of this air valve is its shape. The lower edge of the valve is contoured in such a manner that when air velocity through the carburetor is high, and the lower edge of the air valve approaches the secondary nozzles, the contours act as venturi to increase air velocity at the tips of the nozzles. The effect is essentially that of the theoretical variable venturi in actuality, minus the air restrictions produced by conventional venturi.

The spring tension adjustment on the air valve is sensitive, but the procedure has been made easy, as described in the adjustment section of this manual.

A clogged air bleed or main vent tube may cause excessively rich mixtures. The high-speed bleed and main vent tubes are permanently installed and must not be removed.

The air bleeds, at the top of the vent tubes in the secondary side of the carburetor, also act as anti-percolators in the same manner as in the primary side.

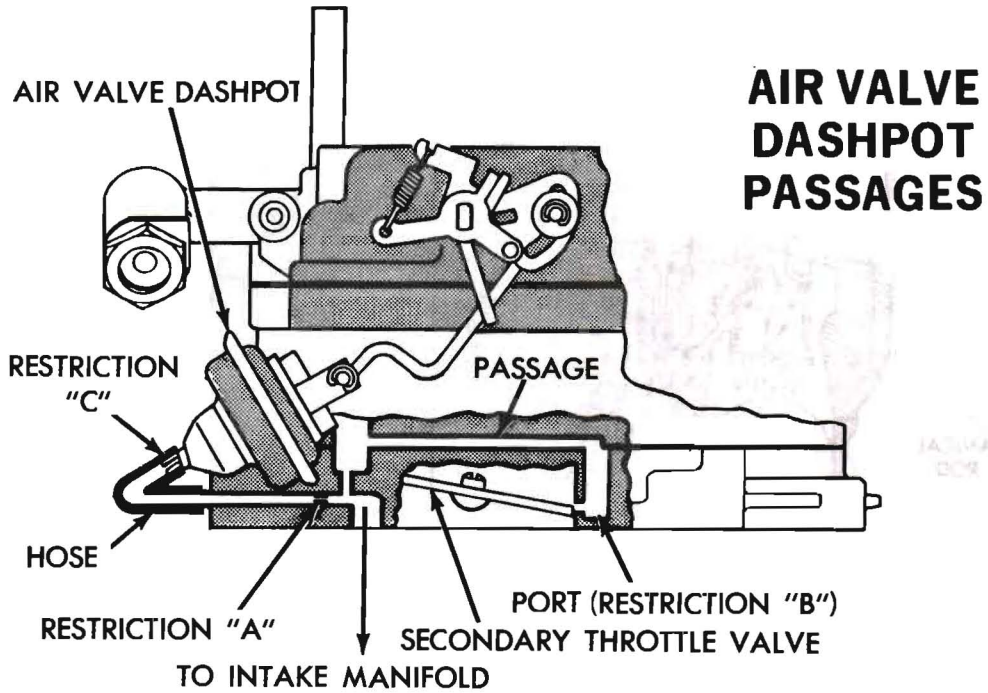

Figure 6. Air Valve Dashpot Operations—Slide 2177

AIR VALVE DASHPOT (DIAPHRAGM) OPERATIONS (See figure 6.)

In addition to the air-valve functions described, an air valve dashpot (or diaphragm) is used to further control the air valve. The operation of the dashpot plus the control restrictions and passages is as follows:

During primary throttle operating condition (secondary valves not open) manifold pressure (vacuum) is transmitted through the passages connecting the air valve diaphragm to the underside of the carburetor flange. If the secondary valves are opened from either a closed throttle or part throttle position of the primary valves, the restrictions "A", "B" and "C" bleed off manifold pressure to the diaphragm, thus allowing the air valve to open at a rate that will provide smooth secondary operation.

Restrictions "A" and "C" are series restrictions for controlling rate of pressure bleed off to the diaphragm. Restriction "B" has an added function: During steady, extreme high-speed operation (70 mph approx.) it is possible that the secondary valves may be opened very slightly. If the diaphragm was directly connected to manifold vacuum at all times, the diaphragm might pull the air valve to a closed position causing an over-rich mixture. Restriction "B" prevents this possibility of over-richness. When the secondary is slightly opened the restriction at "B" bleeds off a part of the manifold vacuum to the diaphragm. The diaphragm can then properly position the air valve for satisfactory performance.

THE PUMP CIRCUIT (See figure 7.)

The accelerating pump circuit, located in the primary side of the carburetor, provides a measured amount of fuel necessary to insure smooth engine operation upon acceleration at lower vehicle speeds.

When the throttle is closed, the pump plunger moves upward in the pump cylinder and fuel is drawn into the pump cylinder through the intake check, located at the bottom of the cylinder. The discharge check (needle) is seated at this time to prevent air from being drawn into the pump cylinder.

When the throttle is opened, the pump plunger moves downward closing the intake check and forcing fuel out through the discharge passage, past the discharge check needle and out through the pump jets.

PUMP CIRCUIT

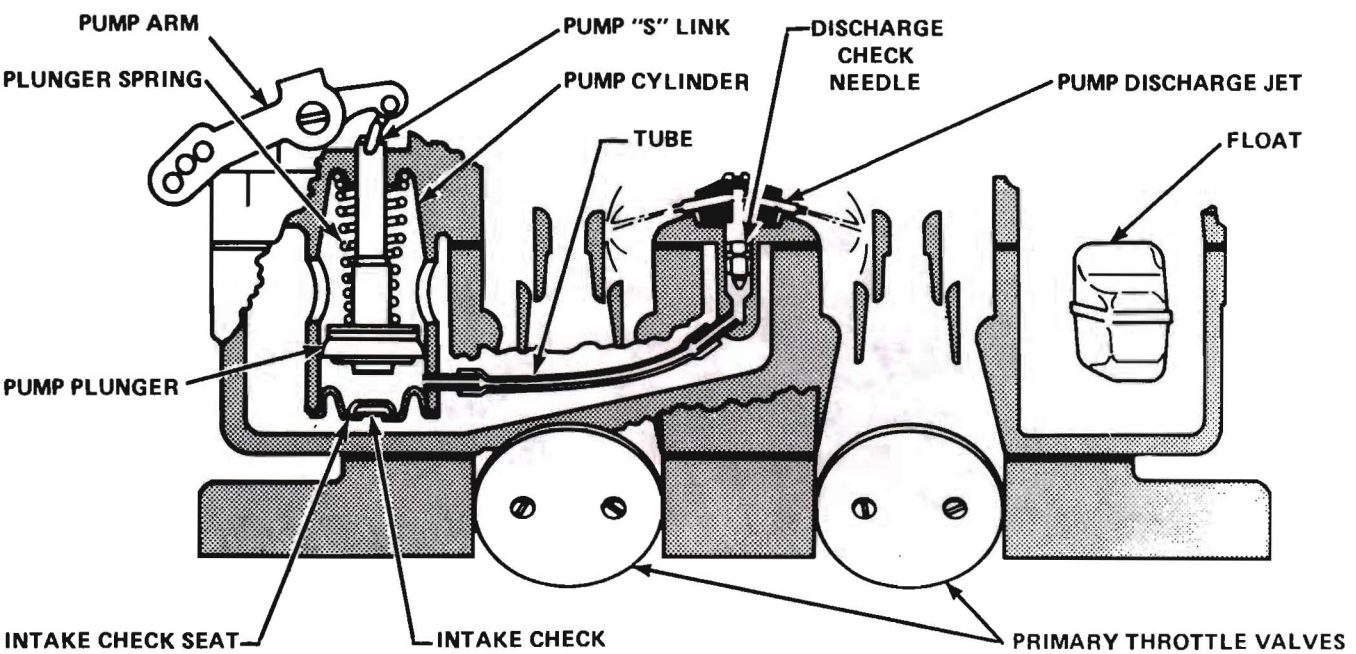

Figure 7. The Thermo-Quad Pump Circuit—Slide 2176, 2178

At higher car speeds, pump discharge is no longer necessary to insure smooth acceleration. Therefore, in order to prevent unnecessary plunger movement, external pump linkage is so constructed that it travels "over center" when the throttle is in the higher speed positions, thus imparting just enough stroke to the plunger to keep all passages filled with liquid fuel.

A plastic tube is used to connect the outlet opening at the bottom of the pump cylinder with passage just below the discharge check. Make sure this tube is not damaged or collapsed when servicing the carburetor.

The spring in the pump cylinder, above the plunger is used to remove all free play from the pump operating linkage and insure an instant fuel discharge the instant the throttle valves are cracked.

A floating rubber cup type accelerator pump is used in 1973 models. This allows a venting action for vapors to pass above the pump and allow only liquid fuel to be emitted, when the pump is actuated.

The intake and discharge checks and pump jet must be free of lint, gum or other foreign material.

On some models, the pump lever contains three holes for attaching the throttle connector rod. Be sure to check the correct vehicle specifications for the proper hook-up.

SERVICE PROCEDURE

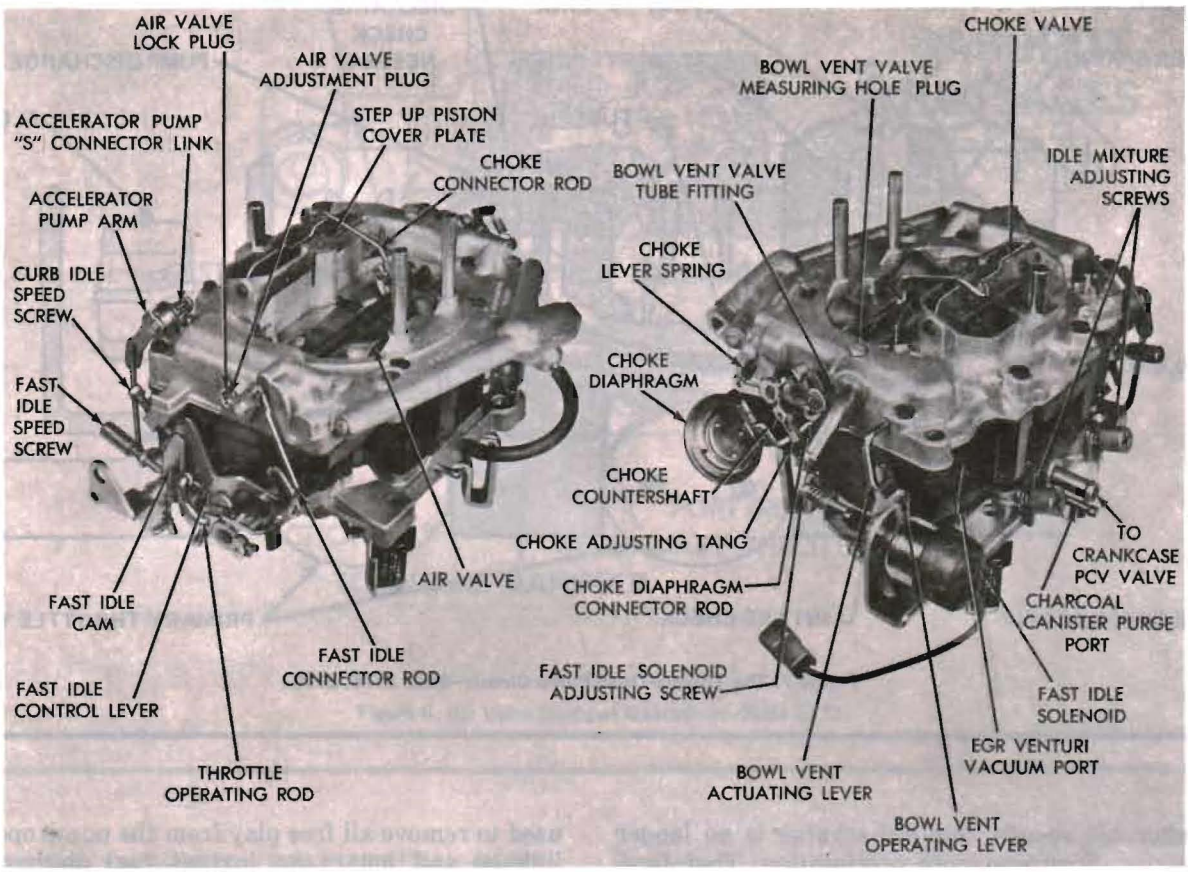

Figure 8. Carburetor on Repair Stand

1. Disassembling Carburetor (See figure 8.)

a. Removing Linkages and Bowl Cover

(1) Place carburetor assembly on repair stand (Tool C-3886). The repair stand is used to protect throttle valves from damage and to provide a suitable base for working.

(2) Remove rod retainers that hold throttle connector rod to accelerator pump arm and throttle lever, then remove rod from carburetor.

(3) Remove accelerator pump arm screw and disengage it from pump rod "S" link, (leave the "S" link connected to pump rod) then remove the lever.

(4) Remove the choke countershaft fast idle lever attaching screw while holding lever. Disengage lever from countershaft, then swing the fast-idle connector rod at an arc until it can be disengaged from the fast-idle operating lever.

(5) Remove rod retainers and washer that holds choke diaphragm connector rod to choke vacuum diaphragm and air valve lever, then remove the lever.

(6) Remove the rod retainer that holds choke connector rod to choke countershaft, then disengage the rod and swing it at an arc to disengage the choke shaft lever assembly.

(7) Remove the step-up piston cover plate attaching screw and cover plates, then remove step-up piston and link assembly with step-up rods. Remove the step-up piston spring.

(8) Remove the pump jet housing screw, housing and gasket. Invert carburetor and remove discharge check needle.

(9) Remove 10 bowl cover screws. (See figure 9.) (Two of the bowl cover screws are located between choke valve and wall of bowl cover.) Remove the bowl cover and invert it on work bench to protect floats.

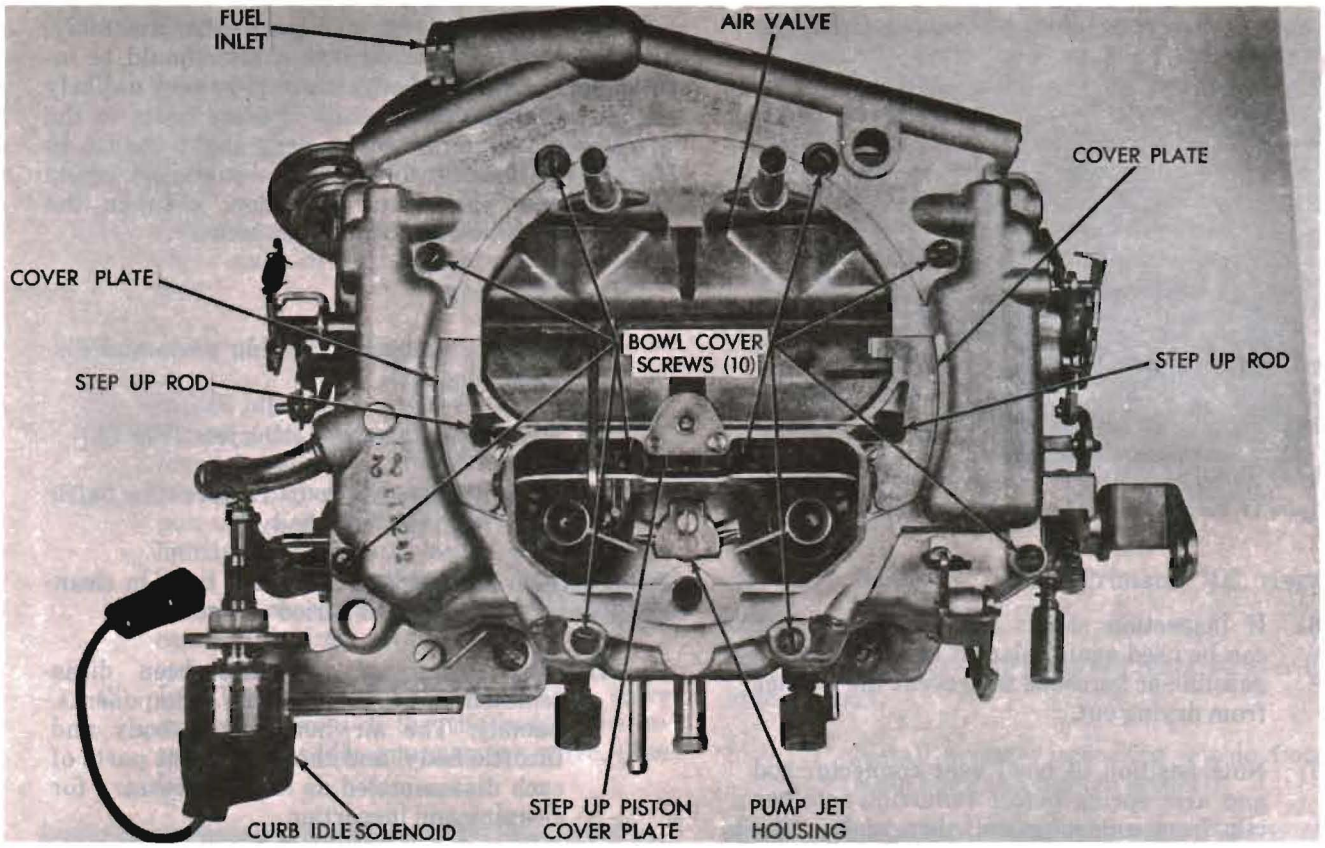

Figure 9. Top View of Carburetor—Slide 2170

b. Disassembling the Bowl Cover

(1) Remove the float lever pins and lift out float assemblies. It is suggested that the float on the pump side be marked so that floats can be reinstalled in their respective positions.

(2) Remove the two needle valves from their respective seats, after marking the one on pump side for identification. Using a wide blade screwdriver, remove needle valve seats. Be sure each needle valve is returned to its original seat during reassembly.

(3) Remove the secondary jets (5/16 open end wrench).

(4) Remove acceleration pump passage tube (plastic) and bowl cover gasket.

(5) Remove accelerator pump rod "S" link. To remove pump plunger assembly, use a small rod placed on upper end of plunger shaft and tap lightly with a small hammer. (See figure 10.)

CAUTION: Exercise care not to damage the plunger shaft hole in bowl cover. This should be done with order to catch the intake check seat, pump plunger and plunger spring (heavy).

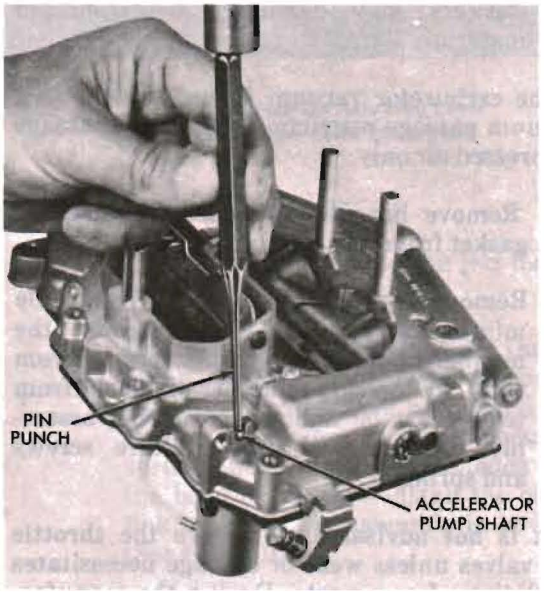

Figure 10. Removing Accelerator Pump Plunger

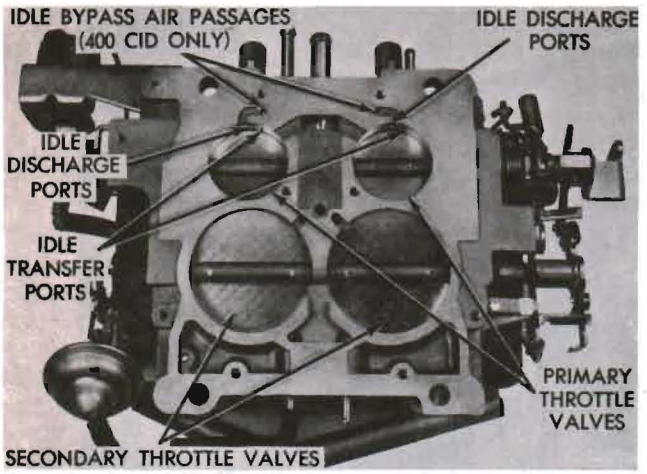

Figure 11. Port Locations in Relation to Throttle Valves

(6) If inspection shows that pump plunger can be used again, place it in a jar of clean gasoline or kerosene to prevent the leather from drying out.

(7) Note position of bowl vent connector rod and arm spring before removing retainer clip from connector rod, then remove the rod from bowl vent operating arm. Remove the grommet seal from operating arm.

(8) Remove the fuel inlet fitting and gasket.

c. Disassembling Throttle Body

(1) Remove step-up actuating lever.

(2) Remove choke diaphragm and bracket assembly with hose and place it to one side to be cleaned as a special item. Liquid cleaners may damage the diaphragm material.

NOTE: The carburetor vacuum fitting hides a very small vacuum passage restriction. Clean this passage with compressed air only.

(3) Remove hot-idle compensator valve and gasket from throttle body.

(4) Remove plastic limiter caps from idle mixture screws. Be sure to count the number of turns to seat the screws (from stop), as the same number of turns (from seat) must be maintained during assembly. Remove both idle mixture screws and springs.

NOTE: It is not advisable to remove the throttle shafts or valves unless wear or damage necessitates the installation of new parts. During the manufacture of the carburetor, the location of the idle transfer ports and the idle discharge ports to the valve is carefully established for one particular assembly. (See figure 11.) If new throttle shafts should be installed in an old worn body, it would be very unlikely that the original relationship of these ports to the valves would be obtained. A very slight change in the port relationship to the valves would adversely affect normal carburetor operation, between the speeds of curb idle and 30 miles per hour.

d. The Main Body

(1) Remove primary "O" ring seals and discard. (Fig. 12.)

(2) Remove primary metering jets. (Fig 12.)

(3) It is not necessary to remove the baffle plate from the main body.

CAUTION: Do not immerse the main body in cleaning solvents for a prolonged period of time.

(4) The carburetor now has been disassembled into three main components, namely: The air horn, main body and throttle body, and the component parts of each disassembled as far as necessary for cleaning and inspection.

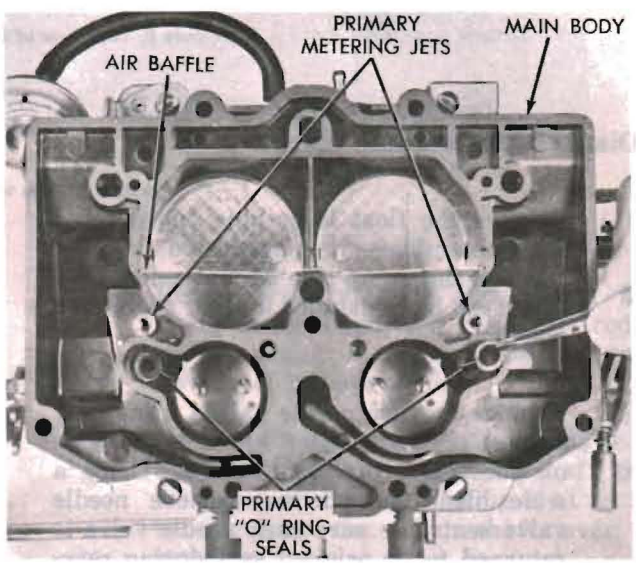

Figure 12. Removing or Installing Primary "O" Rings and Metering Jets–Slide 2171

2. Inspection and Reassembly

a. Visual Inspection

(1) Check for cracks, warpage, stripped screw threads, or damaged or marred mating surfaces, on all major castings. The passages in the castings should be free of restrictions.

(2) Check the float assemblies for damage or any condition that would impair these items from further service.

(3) The choke and throttle valves should be replaced if the edges have been nicked, burred or damaged. Make sure the choke and throttle shafts are not bent or scored.

(4) Replace any broken or distorted springs.

(5) Replace all screws and lockwashers that show signs of stripped threads or distortion.

b. Reassembly of Throttle Body

(1) Install idle mixture screws and springs in the throttle body. The tapered portion must be straight and smooth to insure having correct idle mixture control. Do not use a screwdriver but turn screws lightly against their seats with fingers. Back off the number of turns counted during disassembly. Do not install limiter caps at this time.

(2) Install the hot-idle compensator valve gasket in recess of throttle body; then install the hot-idle compensator valve. (See figure 13.)

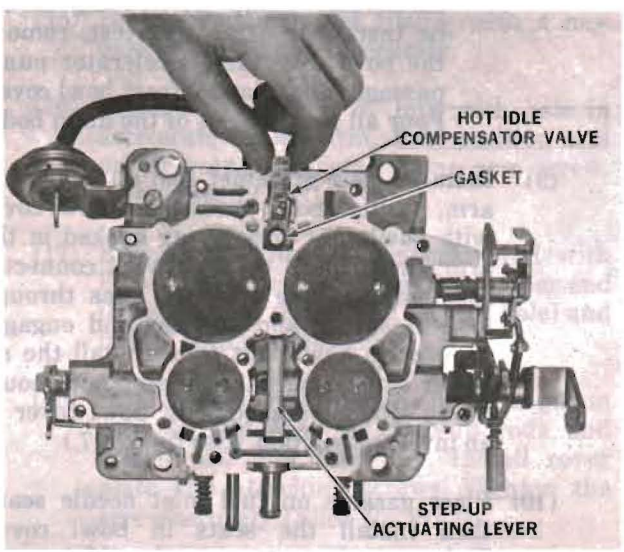

Figure 13. Removing or Installing the Hot Idle Compensator Valve

c. Installing Choke Vacuum Diaphragm (Also called Air Valve Dashpot)

(1) Inspect the vacuum diaphragm fitting to make sure the passage is not plugged with foreign material. Leak test the diaphragm to determine if it has internal leaks. To do this, depress the diaphragm stem, then place a finger over the fitting in order to seal the opening. Release the stem and if it moves more than 1/16 inch in ten seconds, leakage is excessive and the diaphragm assembly must be replaced.

(2) Position the diaphragm and bracket assembly on the locating dowel on mounting surface. Install and tighten one attaching screw.

(3) Inspect the rubber hose for cracks before installing it on the correct carburetor fitting (fitting next to diaphragm bracket). Do not connect the vacuum hose to diaphragm fitting until after the vacuum kick adjustment has been made. (Refer to "Vacuum Kick Adjustment.")

(4) Install step-up actuating lever with edges up as shown in figure 14.

(5) Install throttle body gasket and main body.

(6) Carefully install Primary "O" rings as shown in figure 12.

NOTE: Be sure "O" ring seals are centered over holes in main body.

(7) Install primary metering jets in floor of main body and tighten securely.

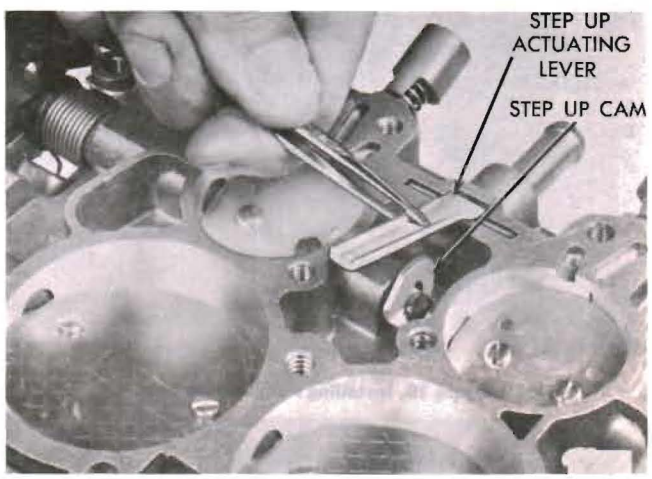

Figure 14. Step-Up Actuating Lever Installation—Slide 2167, 2168

d. Reassembly of Bowl Cover.

(1) Install secondary metering jets over bleed tubes and tighten securely.

(2) Position the accelerator upper (heavy) on pump plunger with large diameter up. (See figure 15.) Install spring and plunger in pump cylinder bore, compressing the spring until plunger rod extends through the bowl cover, then install the pump "S" link to retain the assembly in bowl cover. (See figure 16.)

(3) Position intake check seat with flange down on a clean flat service. (fig. 16)

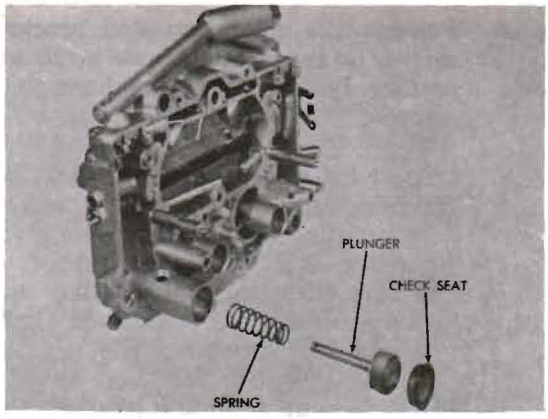

Figure 15. Accelerator Pump Assembly—Disassembled View

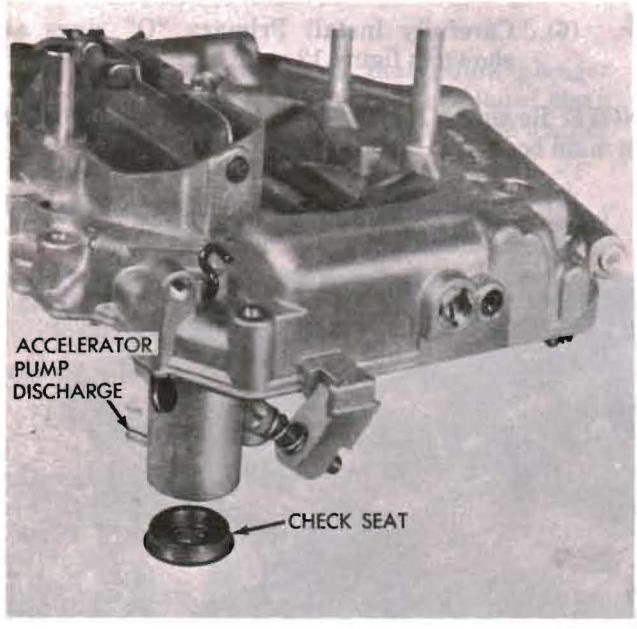

Figure 16. Installing Pump Check Seat

(4) Position the accelerator pump bore over the assembly, then apply firm hand pressure to bowl cover to seat the intake check seat in the pump bore. (See figure 16.)

(5) Install accelerator pump passage tube (plastic). Make sure the tube is not kinked.

(6) Pour clean gasoline into the main body, approximately 1/2 inch deep, and carefully lower the bowl cover down onto the main body. Raise the pump plunger and press lightly on the plunger shaft to expel air from the pump passage.

(7) Install accelerator pump discharge check needle in discharge passage. Using a small clean rod, hold discharge check needle firmly on its seat. Again raise the plunger and press downward. No fuel should be emitted from the discharge passage. Fuel leakage at discharge passage indicates presence of dirt or a damaged check needle. Clean again and install a new check needle. Re-test for leakage.

(8) If the discharge check needle leaks after the above test, attempt to reseat it as follows:

(a) Insert a piece of drill rod down on the needle and lightly tap the drill rod with a hammer to form a new seat. Remove and discard the needle and install a new one. Re-test as described previously. If this service "fix" does not correct the condition, a new carburetor will have to be installed.

(b) Install the accelerator pump jet housing, new gasket and attaching screw. Tighten the screw securely.

(c) Test for proper operation. A clear straight stream should emit from each jet. If streams are not identical, a new accelerator pump jet housing should be installed. After this test, remove the bowl cover and accelerator pump passage tube (plastic) from bowl cover. Pour all gasoline out of the main body.

(9) Install a new grommet seal on bowl vent arm, position bowl vent arm in bowl cover with bowl vent arm spring hooked in the arm, then install the bowl vent connector rod, making sure that rod goes through loop of spring and the flat end engages the slot in bowl vent arm. Install the retainer clip. Bowl vent connector rod should be up when installed with bowl cover in an inverted position. (See figure 17.)

(10) Place gaskets on fuel inlet needle seats, then install the seats in bowl cover. Tighten both seats securely. (Make sure each needle seat and needle is re-installed in its original position, if being re-used).

(11) Place a new bowl-cover to main-body gasket in position on the bowl cover, then slide right- and left-hand floats into position in bowl cover. Install float fulcrum pins. Make sure the marked float is installed on pump side of bowl cover.

(12) With bowl cover inverted, gasket installed and floats resting on seated needle, the dimension of each float from bowl cover gasket to bottom side of float should be according to specifications for the particular carburetor involved. (See figure 18.) To adjust, bend the float lever.

CAUTION: Never allow lip of float to be pressed against the needle when adjusting.

(13) Install the accelerator pump passage tube (plastic).

(14) Examine primary "O" ring seals in bottom of main body to be certain that they are centered over holes (Fig. 12), then carefully lower bowl cover down on main body. The "O" rings will hold the bowl cover up slightly until screws are installed. Be sure bowl vent operating lever engages bowl vent actuating lever. Install ten cover screws and tighten to 50 inch-pounds in two operations.

CAUTION: Be sure float pins are in proper position and not trapped between bowl and air horn gasket. (Slide 2181)

(15) Install the fuel inlet fitting with a new gasket and tighten it securely.

(16) Engage the pump "S" link with hole in accelerator pump arm, then position arm on air horn and install pump arm screw. (See figure 19.)

(17) Engage the throttle connector rod with hole in throttle lever. Insert the other end in accelerator pump arm (center hole) and install both rod retainers.

(18) Install the step-up piston spring in piston cylinder, followed by step-up rods and piston and link assembly. Install cover plate and attaching screws. Tighten the screw securely. (Slide No. 2182)

(19) Engage the choke connector rod with hole in choke valve lever, then swing the rod at an arc until rod can engage choke countershaft. Install the choke lever.

(20) Engage the fast-idle connector rod with the slot in fast-idle operating lever, swing the rod at an arc until the lever can engage the choke countershaft (with choke valve held in open position). Install lever and attaching screw. Tighten screws securely while holding the lever.

(21) Engage the choke diaphragm connector rod to the air valve lever, then install a washer and rod retainer. Connect the other end to choke vacuum diaphragm plunger and install a rod retainer.

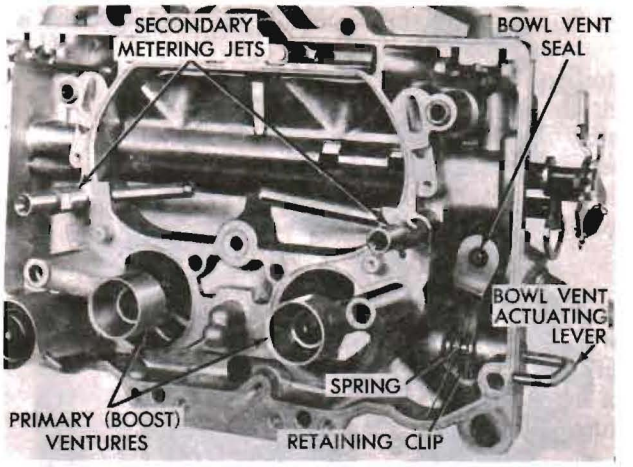

Figure 17. Bowl Vent Assembly Installation

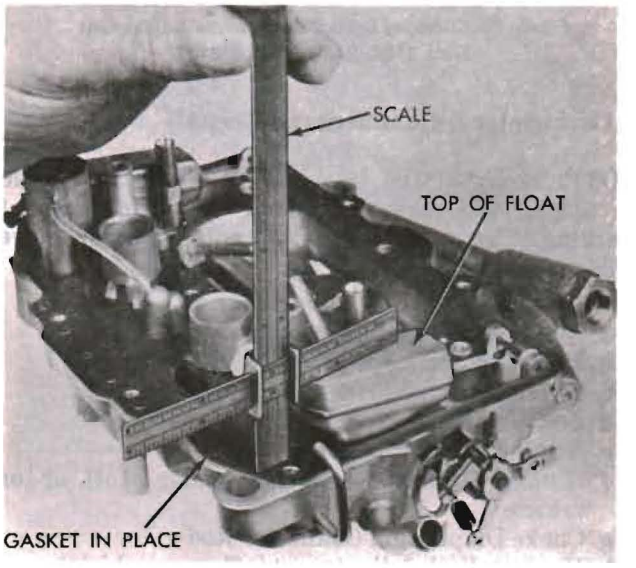

Figure 18. Checking Float Height —Slide 2179, 2180

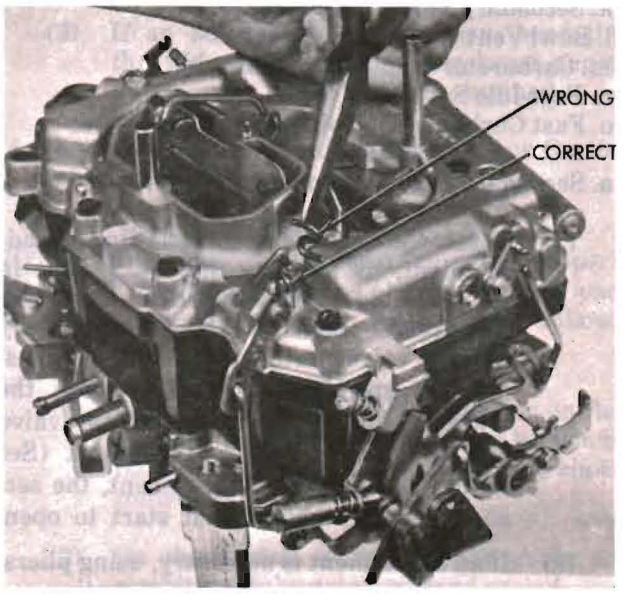

Figure 19. Correct Installation of Pump Rod "S" Link —Slide 2183

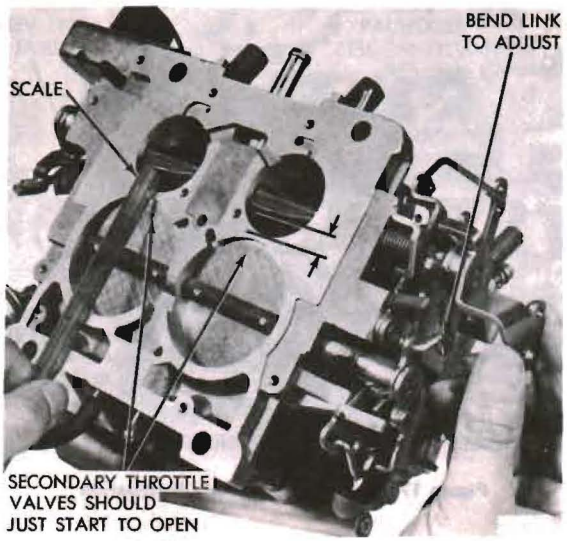

Figure 20. Checking Secondary Throttle Adjustment —Slide 2184, 2185, 2186 & 2187

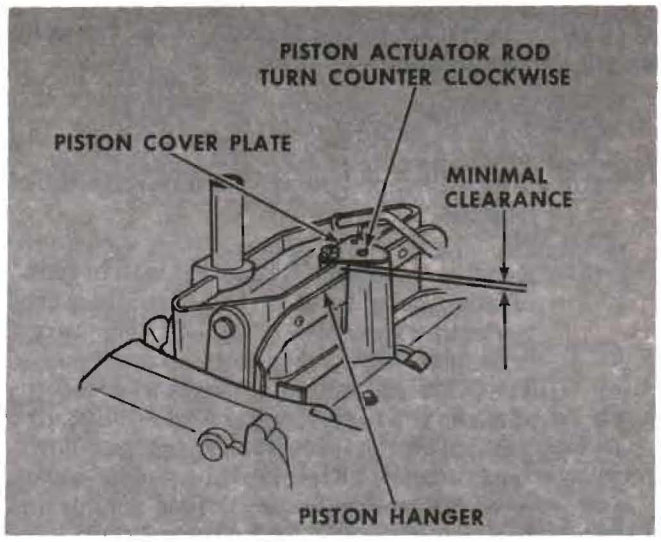

Figure 21. Metering Rod Adjustment—Slide 2373

3. Carburetor Adjustments (External)

NOTE: Many of the following adjustments should be made with carburetor on a bench for ease of working. The adjustments should be made in the following order:

a. Secondary Throttle Linkage
b. Metering Rod Adjustments
c. Secondary Air Valve Opening
d. Secondary Air Valve Spring Tension
e. Accelerator Pump Stroke
f. Choke Control Lever Adjustment (off or on vehicle)
g. Choke Diaphragm Connector Rod
h. Vacuum Kick Adjustment (off or on vehicle)
i. Fast-Idle Cam and Linkage
j. Choke Unloader Adjustment (wide open kick)
k. Secondary Throttle Lock-in
l. Bowl Vent Valve Adjustment
m. Carburetor Installation on Engine.
n. Fast-Idle Speed
o. Fast Curb Idle Solenoid Adjustment

a. Secondary Throttle Linkage Adjustment

(1) Check the secondary throttle linkage adjustment, by blocking the choke valve in the wide open position and inverting the carburetor. Slowly open the primary throttle valves until it is possible to measure the specified distance between the lower edge of the primary throttle valve and the bore (opposite idle port). (See figure 20.) At this measurement, the secondary valves should just start to open.

(2) If an adjustment is necessary, using pliers, bend the secondary throttle operating rod at the angle until correct adjustment has been obtained.

b. Metering Rod Check
Bench Adjustment Only (OFF VEHICLE)

(1) The metering rod adjustment of a Thermo Quad is pre-set at the factory. On disassembly for servicing it is important to check for proper alignment of parts and any possible binding of the throttle after the unit is reassembled. After reassembly move the throttle lever from the closed to the wide open position to check for any binding between the piston hanger and cover plate that will allow the throttle lever to stick in a wide open position. **TO ELIMINATE ANY BINDING OR STICKING OF THE THROTTLE LEVER:** Place a small screwdriver in the slot of the piston actuator rod and press downward bottoming the piston in the cylinder. Carefully turn screwdriver counterclockwise to achieve a minimal clearance between the cover plate and piston with the throttle in a wide open position. Recheck for binding after adjustment. **(Adjust for binding only.)**

c. Secondary Air Valve Opening Adjustment

(1) With the air valve in closed position, the opening along the air valve at the long side must be at its maximum and parallel with the air horn gasket surface.

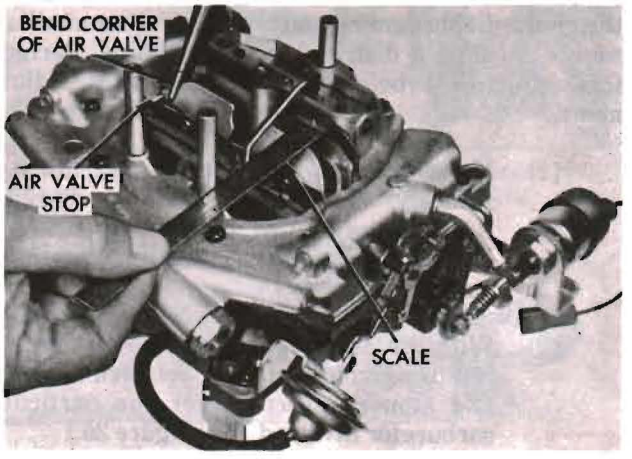

Figure 22. Adjusting Secondary Air Valve Opening—Slide 2188

(2) With air valve in wide open position, the opening of the air valve at the short side and air horn should be according to specifications for the particular carburetor involved. The corner of the air valve is notched for adjustment. Bend the corner with a pair of pliers to provide the proper opening. (See figure 22.)

d. Secondary Air Valve Spring Tension Adjustment.

(1) Loosen the air valve lock plug (figure 23) and allow the air valve to position itself to wide open position.

(2) With a long screwdriver that will pass through the center of Tool C-4152 (positioned on air valve adjustment plug) rotate the plug counterclockwise until the air valve contacts its stop lightly, testing with the finger, then rotate an additional number of turns as specified for the carburetor involved.

(3) Hold the adjustment plug with screwdriver, and tighten the lock plug securely with Tool C-4152. Make sure the adjustment does not move when tightening. Check the air valve for freedom of movement. There must be no binding at any valve position.

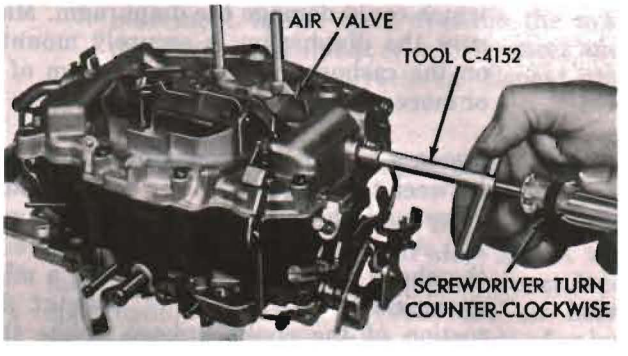

Figure 23. Adjusting Air Valve Spring Tension—Slide 2189 & 2190

e. Accelerator Pump Stroke Adjustment

(1) Move the choke valve to wide open position, to release the fast idle cam. Back off the idle-speed adjusting screw (curb idle) until throttle valves are seated in bores. Make sure the throttle connector rod is installed in the specified hole of accelerator pump arm.

(2) Close the throttle valve tightly and measure the distance between top of bowl cover and end of plunger shaft. (See figure 24.) This measurement should be as specified for the particular carburetor being serviced.

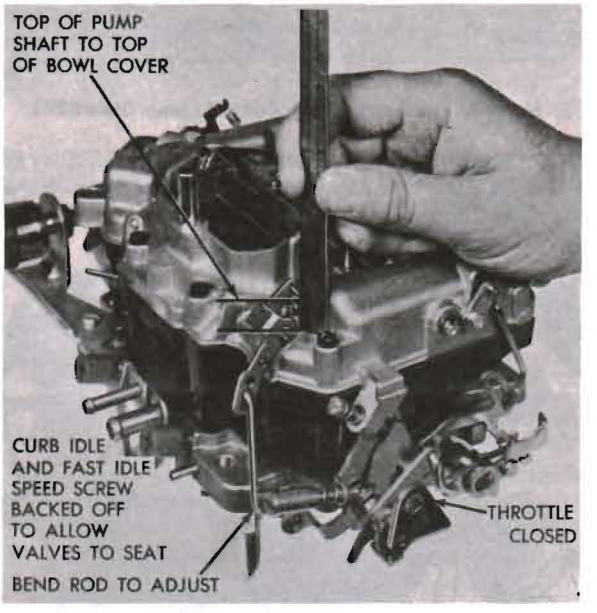

Figure 24. Adjusting the Accelerator Pump Stroke —Slide 2191 & 2192

(3) If an adjustment is necessary, bend the throttle connector rod at the lower angle, until correct travel has been obtained.

f. Choke Control Lever Adjustment (Off or On the Vehicle)

NOTE: The choke control lever must be properly adjusted to provide correct choke thermostat loads and choke linkage operation. Adjust it as follows:

(1) Off vehicle — place the carburetor on flat object with surface flush against bottom of flange and extending out under the choke control lever.

(2) On the vehicle — remove the choke assembly, stainless steel cup and gasket.

(3) Close the choke valve by pushing on choke lever, with throttle partially open.

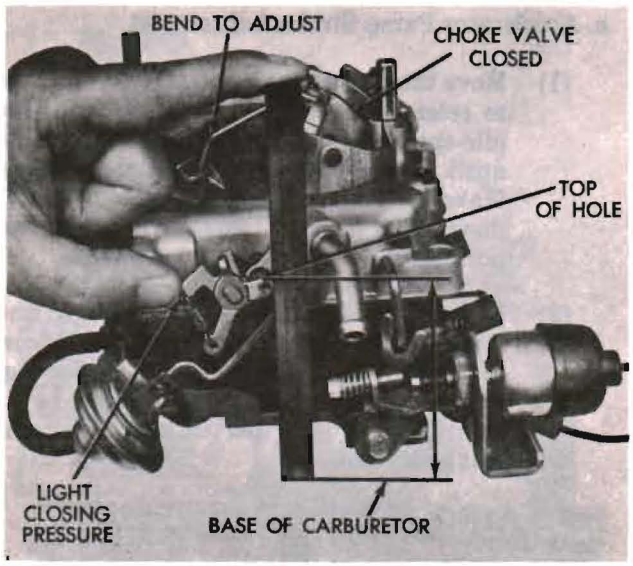

Figure 25. Adjusting Choke Control Lever- Slide 2193

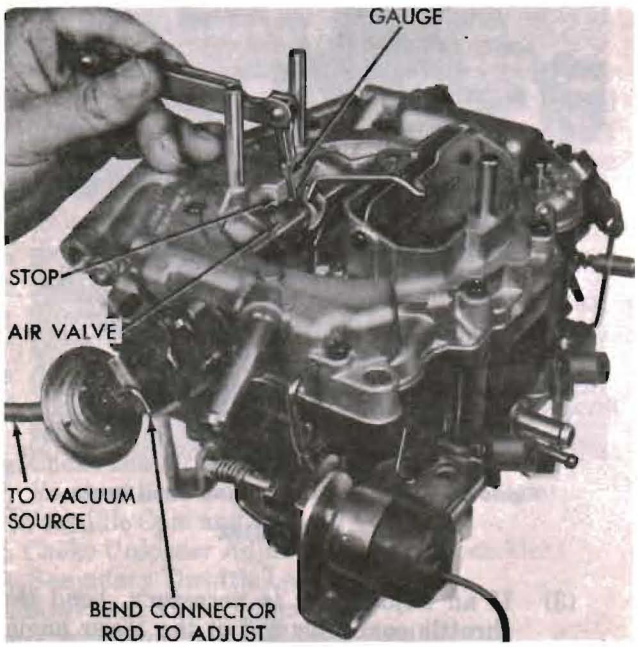

Figure 26. Adjusting Choke Diaphragm Connector Rod (Secondary Air Valve Control)—Slide 2194 & 2196

(4) Measure the vertical distance from top of rod hole in control lever down to the flat surface simulating carburetor bottom (off vehicle) or down to clean choke pad surface (on vehicle).

(5) This dimension (on or off the vehicle) should be as specified for the particular carburetor being serviced. (See figure 25.)

(6) Adjust by bending the link connecting the two choke shafts as indicated. (See figure 25.)

g. Choke Diaphragm Connector Rod (Secondary Air Valve Control) Adjustment

NOTE: The diaphragm must be depressed to adjust the choke diaphragm connector rod. Use an auxiliary source, such as a distributor test machine. Perform this adjustment before the Vacuum Kick Adjustment.

(1) Make sure the diaphragm assembly is securely mounted on the carburetor. Apply a vacuum of 10 or more inches of Hg. to the diaphragm to fully depress the diaphragm stem.

(2) With the air valve closed, adjust connector rod to provide clearance between air valve and stop as specified for the particular carburetor involved. (See figure 26.)

h. Vacuum Kick Adjustment (Off or On the Vehicle.)

The choke diaphragm adjustment controls the fuel delivery while the engine is running and the choke is closed, or partially closed. It positions the choke valve within the air horn by use of linkage between the choke shaft and diaphragm. The diaphragm must be depressed to measure the vacuum kick. Use vehicle vacuum or an auxiliary source such as a distributor test machine. Perform this adjustment after qualification of the Choke Diaphragm Connector Rod and Choke Control Lever.

(1) Off vehicle — open the throttle valves and move the choke valve to closed position with the control lever. Release the throttle before releasing choke to trap the fast-idle cam in closed choke position.

(2) On vehicle — with engine running, back off the fast-idle speed screw until the choke can be closed to the kick position at curb idle. (Note number of screw turns required so that fast-idle can be returned to its original adjustment.)

(3) Off vehicle — using an auxiliary vacuum source, disconnect the vacuum hose from carburetor and connect it to the hose from vacuum supply with a small length of tube to serve as a fitting. Removal of the hose from diaphragm may require forces which could damage the diaphragm. Make sure the diaphragm is securely mounted on the carburetor. Apply a vacuum of 10 or more inches of Hg.

(4) Insert a specified (See specifications) drill between the long side (lower edge) of choke valve and the air horn wall. (See figure 27.) Apply sufficient closing pressure on the choke control lever to provide a minimum choke valve opening without distortion of the choke linkage. (Note that some carburetor models extend a spring

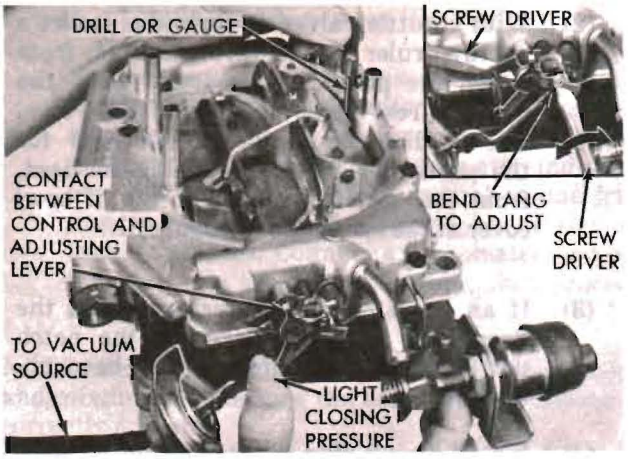

Figure 27. Adjusting Vacuum "Kick"–Slide 2197 & 2374

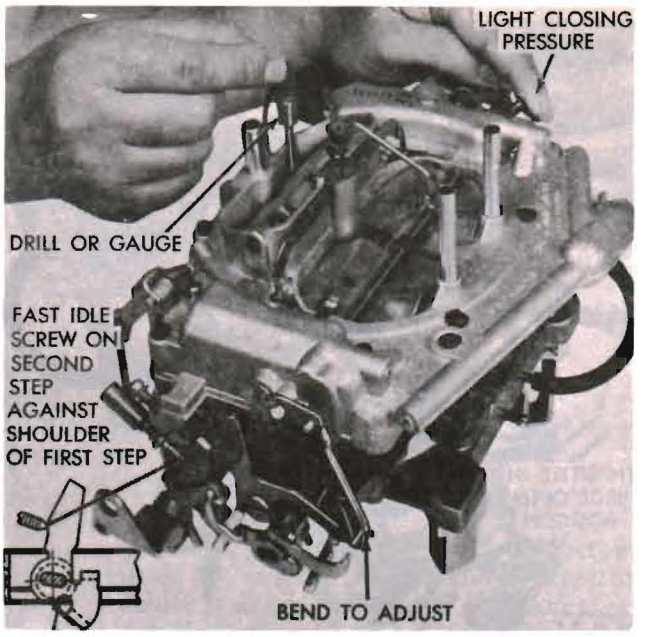

Figure 28. Adjusting Fast-Idle Cam and Linkage–Slide 2198 & 2199

connecting the control lever to an adjustment lever. This spring must be fully extended for proper measurement of the vacuum kick adjustment.)

(5) Adjustment will be necessary if a slight drag is not obtained as the drill is being removed. Bend the tang indicated in figure 27 to change contact with end of diaphragm rod. Adjust the tang only while applying a counter force to the adjustment lever. Counter force can be provided by a screwdriver placed in the U-shaped opening between the lever and shaft.

CAUTION: Do not load the link connecting the two choke shafts because the choke "Control Lever Qualification" will change.

(6) Re-install the vacuum hose on correct carburetor fitting. Return the fast-idle screw to its original adjustment if an on vehicle adjustment was made.

(7) With no vacuum applied to diaphragm, the choke valve should move freely between open and closed positions. If this movement is not free, examine the system for misalignment or interferences and make necessary corrections. Repeat the adjustment if necessary.

i. Fast-Idle Cam and Linkage Adjustment

With fast-idle screw on second step of fast-idle cam, against shoulder of first step, adjust the fast-idle connector rod to obtain correct (see specifications) opening between the air horn wall and edge of choke valve (long side of valve nearest lever). (See figure 28.)

j. Choke Unloader Adjustment (Wide Open Kick)

The choke unloader is a mechanical device to partially open the choke at wide open throttle. It is used to eliminate choke enrichment during cranking of an engine. Engines which have been flooded or stalled by excessive choke enrichment can be cleared by use of the unloader. Adjust it as follows:

(1) Hold throttle valves in wide open position. Insert specified (see specifications) drill between long side (lower edge) of choke valve and inner wall of air horn. (See figure 29.)

(2) With the finger pressing lightly against the choke control lever, a slight drag should be felt as the drill is being withdrawn. If necessary, adjust by bending the tang on fast-idle control lever until correct opening has been obtained.

k. Secondary Throttle Lock-in Adjustment

Secondary throttle operation is eliminated during the choke cycle by use of a latch, triggered by the fast-idle system. Adjust it as follows:

(1) Move the choke control lever to the open choke position.

(2) Measure clearance between lock-in lever and stop, which should be between .010 and .030 inch. (See figure 30.)

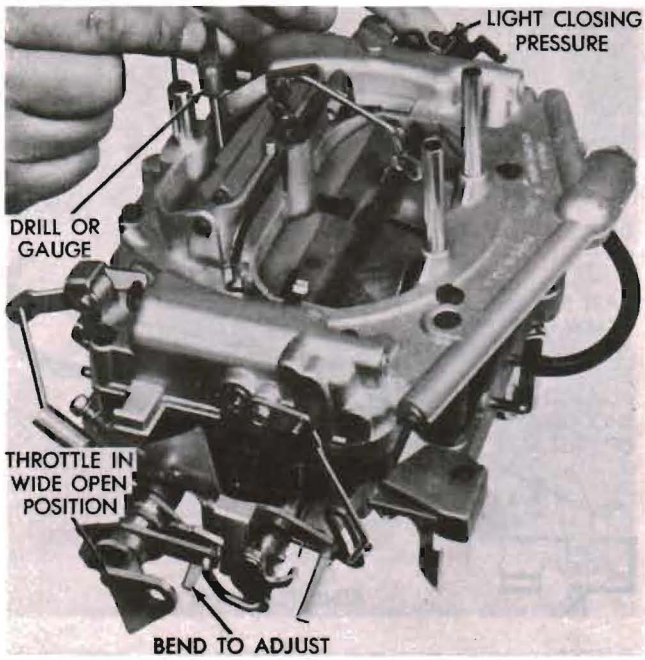

Figure 29. Adjusting Choke Unloader—Slide 2200

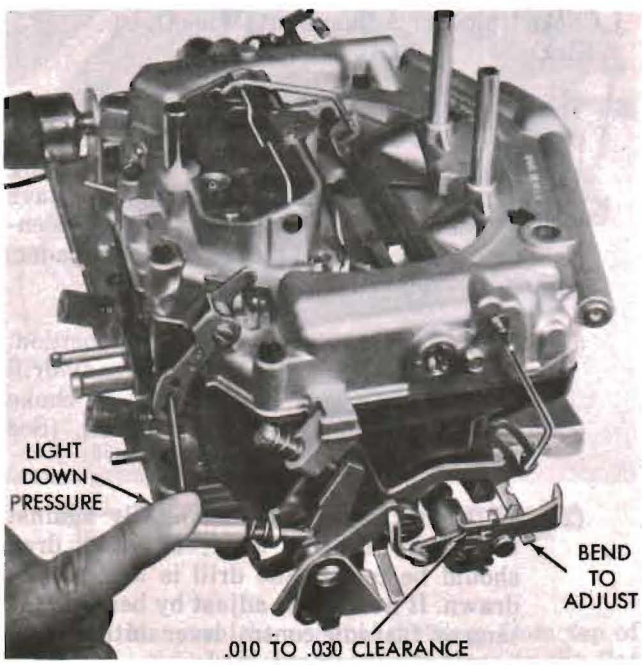

Figure 30. Adjusting Secondary Throttle Lock-in—Slide 1194

(3) Bend the tang on fast-idle control lever to provide the proper clearance.

l. Bowl Vent Valve Adjustment

(1) Using a suitable tool, remove the bowl vent valve checking hole plug in bowl cover.

(2) With throttle valves at curb idle, insert a narrow ruler down through hole from which the plug was removed. Allow the ruler to rest lightly on top of the valve. The reading should be as specified for the particular carburetor being serviced, from the top of the valve to top of bowl cover at the opening. (See figure 31.)

(3) If an adjustment is necessary, bend the bowl vent operating lever at the notch until correct valve opening has been obtained.

(4) Install a new plug and tap it lightly with a small hammer to seat it in bowl cover.

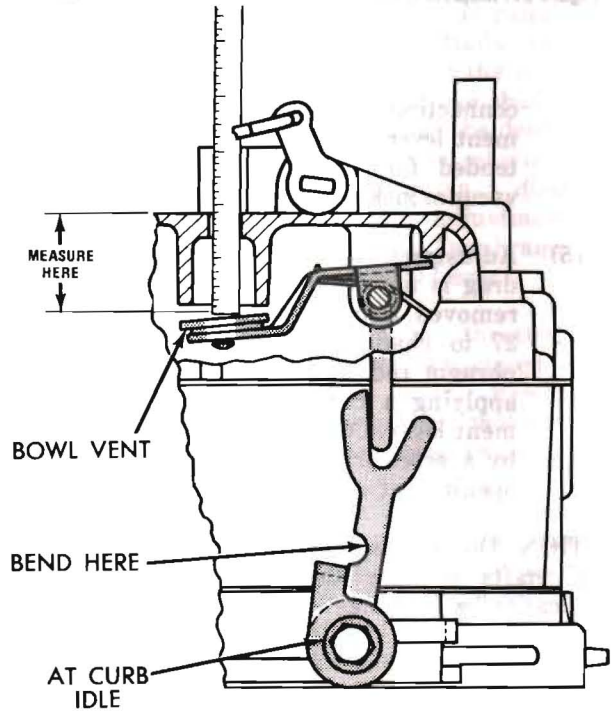

Figure 31. Adjusting Bowl Vent—Slide 1195

m. Installing Carburetor On Engine

(1) After the preceding adjustments have been completed, re-install the carburetor on the engine, using a new gasket.

(2) It is suggested that the carburetor be filled with clean gasoline. This will help prevent dirt that is trapped in the fuel system, from being dislodged by free flow of fuel, as the carburetor is primed. It will also enable a quick start.

n. Fast Idle Speed Adjustment (On Vehicle)

Fast-idle engine speed is used to overcome cold engine friction, stalls after cold starts and stalls because of carburetor icing. Set this adjustment after the vehicle odometer indicates over 500 miles to insure a normal engine friction level. Prepare the engine by driving at least five miles. Connect a tachometer and set the curb idle speed and mixture, then proceed as follows:

NOTE: Before adjusting idle and/or fast-idle speeds and mixtures, make sure the basic ignition timing is correctly adjusted.

(1) With engine off and transmission in "PARK" or "NEUTRAL" position, open the throttle slightly.

(2) Close the choke valve until the fast-idle screw can be positioned on the second step of fast-idle cam against shoulder of first step. (See figure 32.)

(3) Start the engine and determine stabilized speed. Rotate the fast-idle speed screw in or out to secure the specified speed. (Refer to specifications.)

(4) Stopping the engine between adjustments is not necessary. However, re-position the fast-idle speed screw on the cam after each speed adjustment to provide correct throttle closing torque.

o. Fast Curb Idle Speed Solenoid Adjustment

(1) Warm up the engine to normal operating temperature, and connect a tachometer.

(2) With engine running (solenoid energized), rotate the fast curb idle adjusting screw in or out against the solenoid plunger to secure specified engine rpm for manual or automatic transmission equipped vehicles. (Refer to specifications for correct engine rpm.)

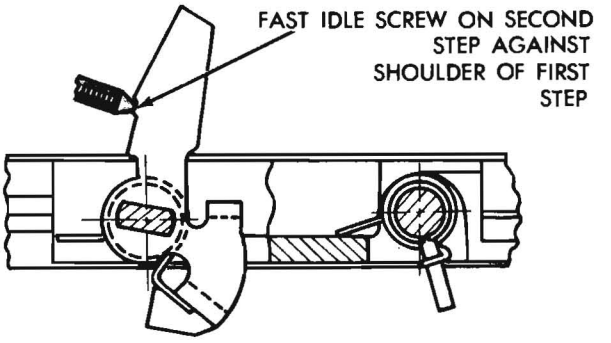

Figure 32. Fast-Idle Speed Cam Position—Slide 2201

(3) After the specified rpm has been obtained and, with engine still running (solenoid energized), adjust the slow curb idle speed screw until end of screw just touches the stop. Now, back off one full turn of the screw to obtain the correct slow curb idle speed setting. (Refer to specifications.) Test by disconnecting the solenoid wire at the connector. (Do not allow the lead to short circuit on the engine.) The solenoid will not advance throttle with the wire disconnected. It will be necessary to manually advance the throttle to obtain a fast curb idle.

(4) Re-connect the solenoid wire after the test.

PARTS LIST

The exploded view drawing (figure 33) shows the carburetor completely broken down into individual parts. Each item is referenced from the drawing (figure 33) to the accompanying "Parts List" by an arbitrary number entitled "Index No.". DO NOT ATTEMPT TO ORDER PARTS BY THESE NUMBERS.

The second column in the "Parts List", entitled "Family Group No." is the family number prefix, appearing in all Carter parts lists for a specific carburetor. The identifying suffix following the dash may be secured from the Carter Catalog Sheet for a specific carburetor model.

NOTE: The following "Parts List" and figure 33 are provided in this publication for reference, identification and location of parts . . . not for ordering parts. (Refer to the specific catalog sheet.)

Index No.	Family Group No.	Part Name
1	101—	Choke lever screw
2	114—	Choke lever
3	115—	Choke connector rod
4	105A—	Connector link retainer (2)
5	136—	Diaphragm link washer
6	115—	Diaphragm link
7	101—	Metering rod and piston cover plate cover screw (3)
8	65—	Metering rod cover plate (choke side)
9	65—	Metering rod cover plate (pump side)
10	65—	Step-up piston cover plate
11	160—	Step-up piston and link assembly
12	16—	Metering rod (2)
13	61—	Step-up piston spring
14	11B—	Bowl vent valve adjustment plug
15	15—	Fuel inlet fitting and gasket
16	115—	Throttle connector link
17	101—	Pump arm screw
18	111—	Pump arm
19	117—	Pump connector "S" link
20	11B—	Air valve lock plug
21	11B—	Air valve adjustment plug
22	61—	Air valve spring
23	101—	Choke countershaft screw
24	14—	Choke countershaft lever
25	115—	Fast idle connector rod
26	101—	Air horn assembly screw (10)
27	*6—	Air horn assembly
28	63—	Pump intake check assembly
29	64—	Plunger assembly
30	61—	Plunger spring
31	24—	Float pin (2)
32	21—	Float (2)
33	25—	Needle, seat and gasket (2)
34	145—	Pump passage tube
35	121—	Air horn gasket
36	150A—	Bowl vent lever pin
37	115—	Bowl vent lever
38	61—	Bowl vent lever spring
39	53A—	Bowl vent arm
40	164—	Bowl vent grommet
41	120—	Primary metering jet (2)
42	120—	Secondary metering jet (2)
43	163—	"O" Rings (2)
44	*0—	Main body
45	121—	Main body gasket
46	169—	Hot idle compensator valve
47	20—	Hot idle compensator valve gasket
48	145—	Choke diaphragm hose
49	101—	Diaphragm and bracket screw
50	202—	Choke pull-off and air valve dashpot assembly
51	101—	Solenoid bracket screw
52	213—	Solenoid and bracket
53	101—	Bowl vent operating screw
54	53A—	Bowl vent lever
55	53A—	Bowl vent arm
56	136—	Throttle shaft washer
57	111—	Step-up piston lifter lever
58	24—	Step-up piston lifter lever pin
59	96—	Idle limiter cap (2)
60	30A—	Idle mixture screw (2)
61	61—	Idle mixture screw spring (2)
62	101—	Throttle speed screw
63	101—	Fast curb idle speed screw
64	101—	Fast curb idle speed screw
65	101—	Pump housing screw
66	48—	Pump jet housing
67	121—	Pump housing gasket
68	17—	Discharge check needle
69	*1—	Throttle body assembly

*Not serviced as a separate component.

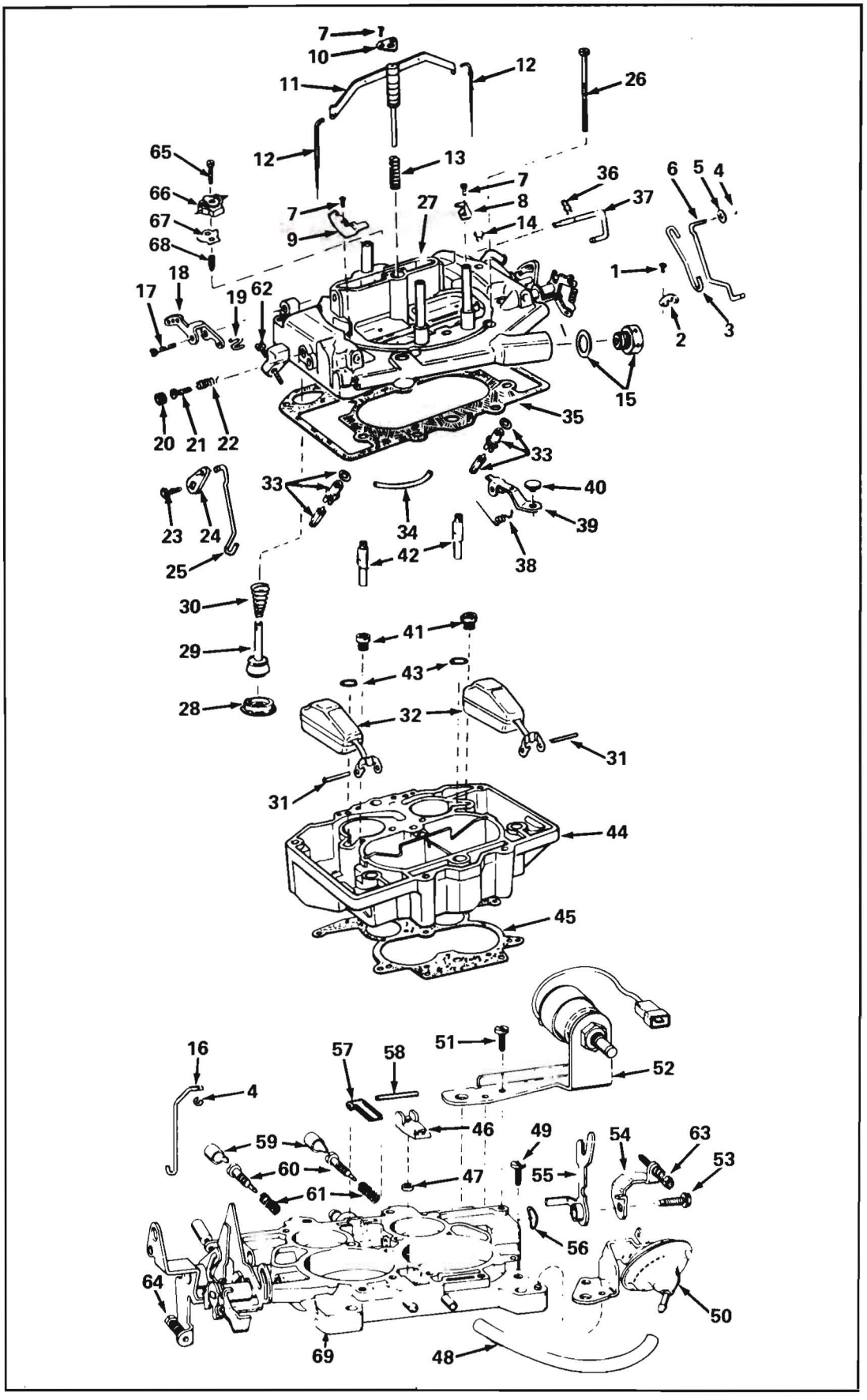

Figure 33. Exploded View of Carburetor

CARTER
SOLID FUEL
THERMO·QUAD

Form 3623
Printed in U.S.A.